01 A-01 PERSPECTIVE
NOT TO SCALE

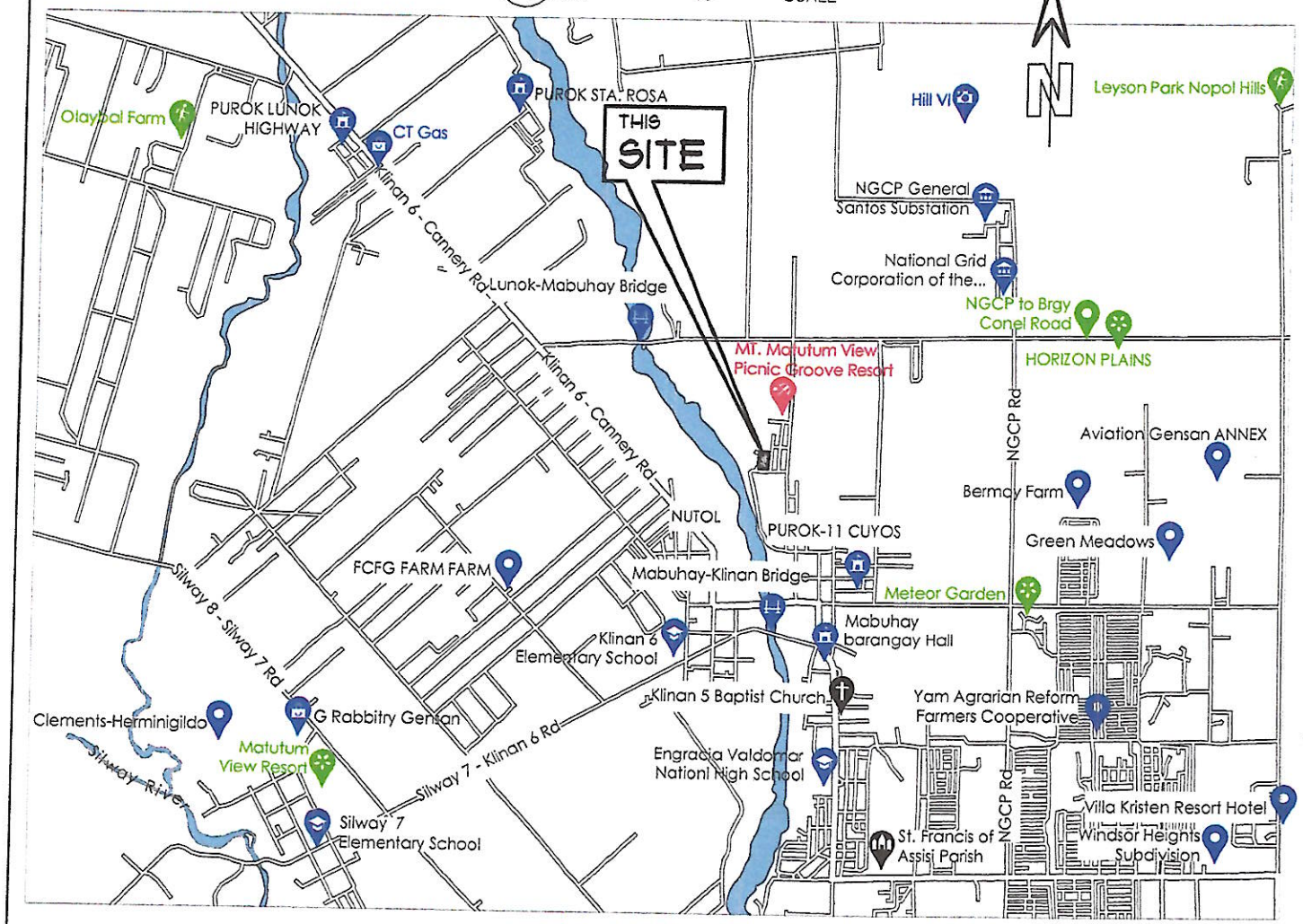

02 A-01 VICINITY MAP
NOT TO SCALE

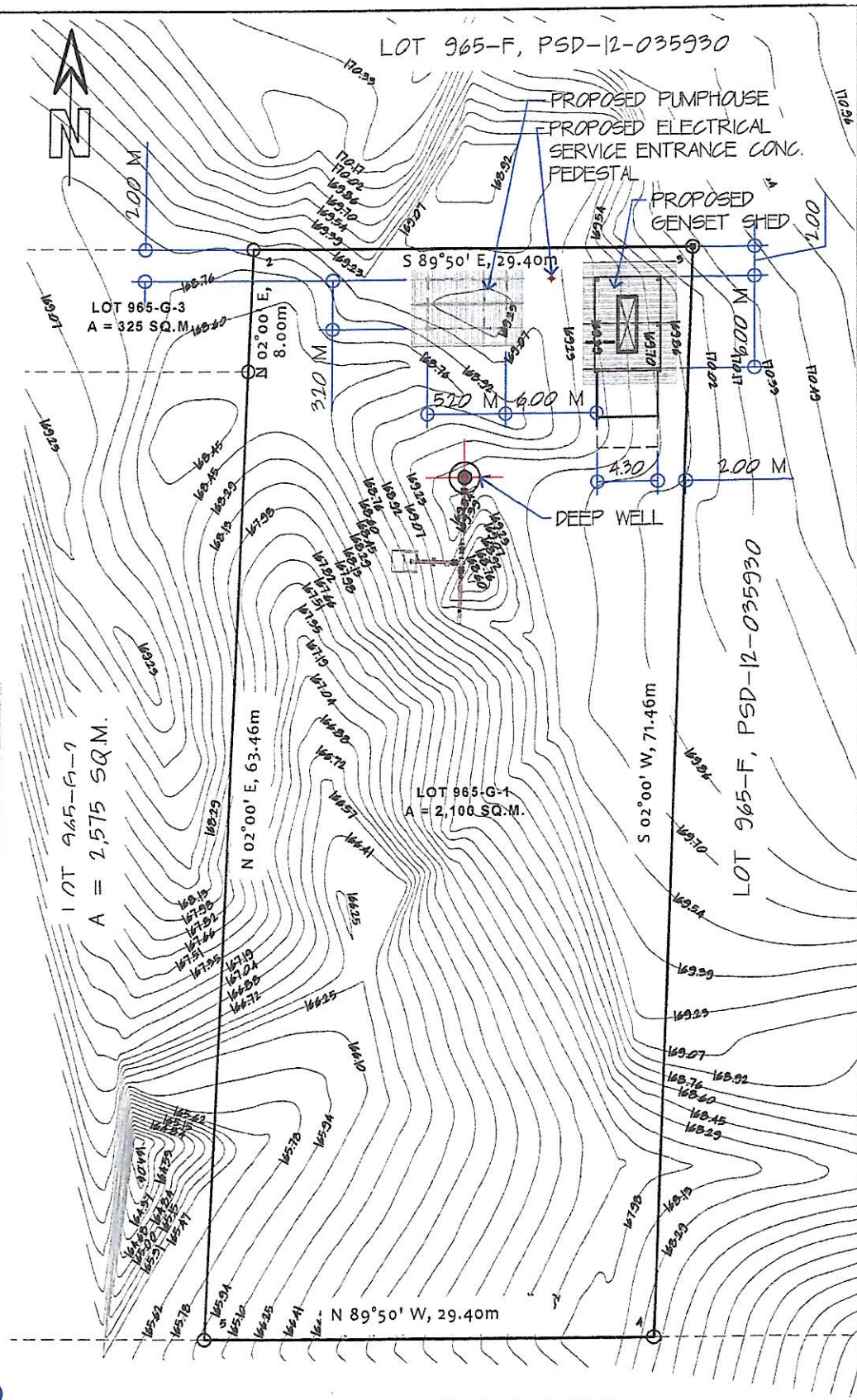

03 A-01 SITE DEVELOPMENT PLAN
SCALE: 1 : 800
M

REPUBLIC OF THE PHILIPPINES
CITY OF GENERAL SANTOS
OFFICE OF THE CITY ENGINEER

OFFICE OF THE BUILDING OFFICIAL

LAND USE & ZONING

LINE AND GRADE

ARCHITECTURAL

STRUCTURAL

SANITARY

ELECTRICAL

MECHANICAL

ELECTRONICS

GENERAL SANTOS CITY WATER DISTRICT
E. FERNANDEZ STREET, BRGY. LAGAO, GEN. SANTOS CITY
ENGINEERING & CONSTRUCTION DEPARTMENT
PLANNING AND DESIGN DIVISION
TEL. NO.: (083) 552 - 3824

NOELLE JUSTINE C. ESPESOR
REGISTERED ARCHITECT
LICENSED ARCHITECT
PRC Reg. No.: 0052090
PTR No. : TIN NO.: 0015299004A
Issued On : DATE: JAN. 2, 2025
Issued At : GENERAL SANTOS CITY
TIN : 737-426-913-000

PROJECT AND LOCATION	REVIEWED:	RECOMMEND APPROVAL:	APPROVED:	SHEET CONTENTS	SHEET NO.
PROPOSED CONSTRUCTION OF PUMPHOUSE & GENSET SHED	ENGR. MARIA CELIA N. DANDAN	ENGR. ROGELIO A. BESANA, JR.	FRANCISCO R. ALOLOD, JR., CPA, CESE	AS SHOWN	A-01
LOT 965-G-1, BRGY. MABUHAY, GEN. SANTOS CITY	DEPARTMENT MANAGER, ECD	AGM, OTS	ACTING GENERAL MANAGER	DRAWN BY: Dug-Rae / REV. NO. 01	15
				CHECKED BY: / DATE: Apr 2025	

SCHEDULE OF FINISH

FLOORS :

(FL1) PLAIN CEMENT FLOOR FINISH

WALLS :

(WF1) 100mm thk. MACHINE MADE CHB W/ PLAIN CEMENT PLASTER (ACRYLIC PAINT FINISH)

CEILING :

(CL1) 3.5mm thk FIBER CEMENT BOARD (PAINT FINISH) ON METAL FURRING CEILING FRAMES. USE 0.60mm thk. x 19mm x 50mm x 5000m DOUBLE FURRING CHANNELS @0.40m ON CENTER W/ 0.60mm thk. x 38mm x 5000mm CARRYING CHANNELS @ 1.20m ON CENTERS & ROD JOINER (HANERS/SUPPORTS) @ 1.20m O.C., SHORTER SPAN

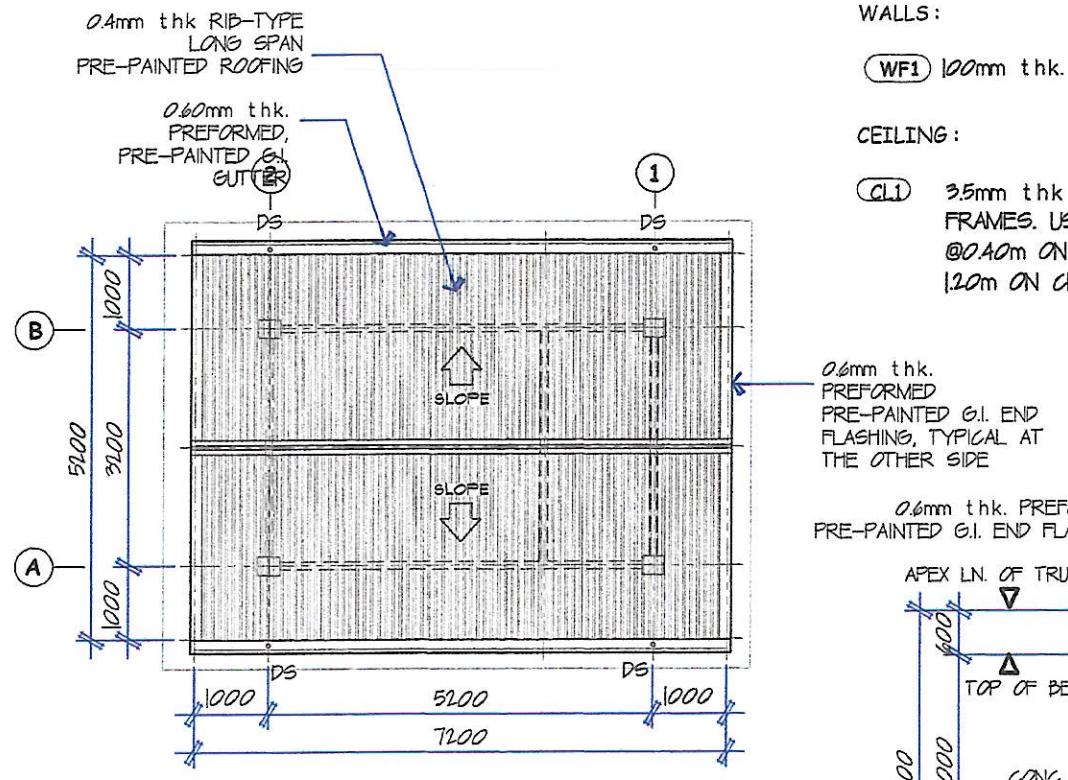

06 A-02 ROOF PLAN (PUMPHOUSE)
SCALE : 1 : 100 M

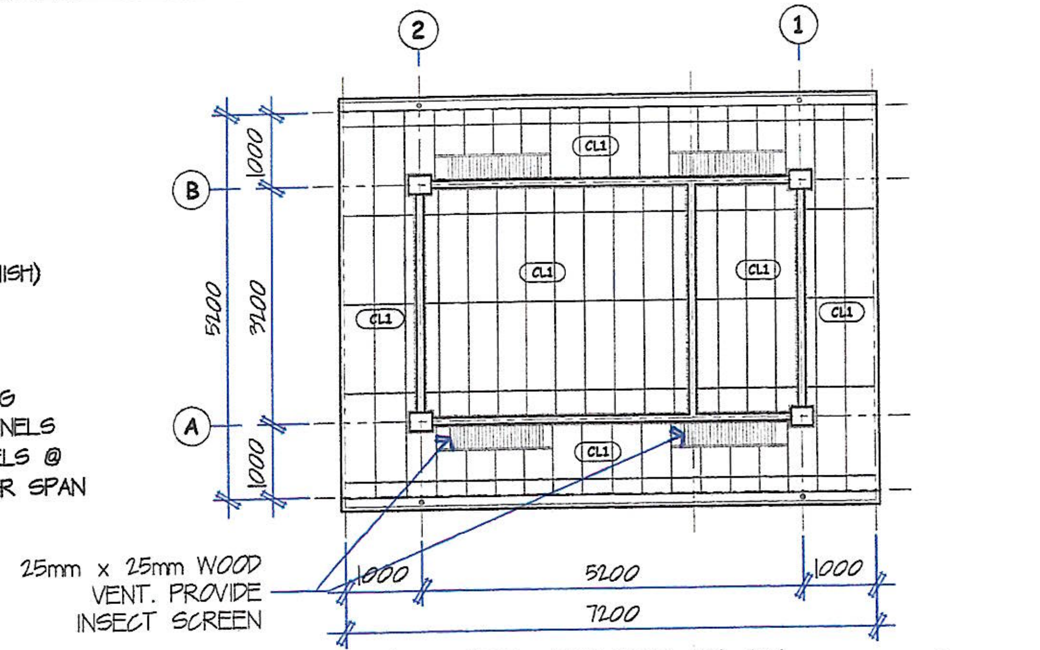

07 A-02 REFLECTED CEILING PLAN (PUMPHOUSE)
SCALE : 1 : 100 M

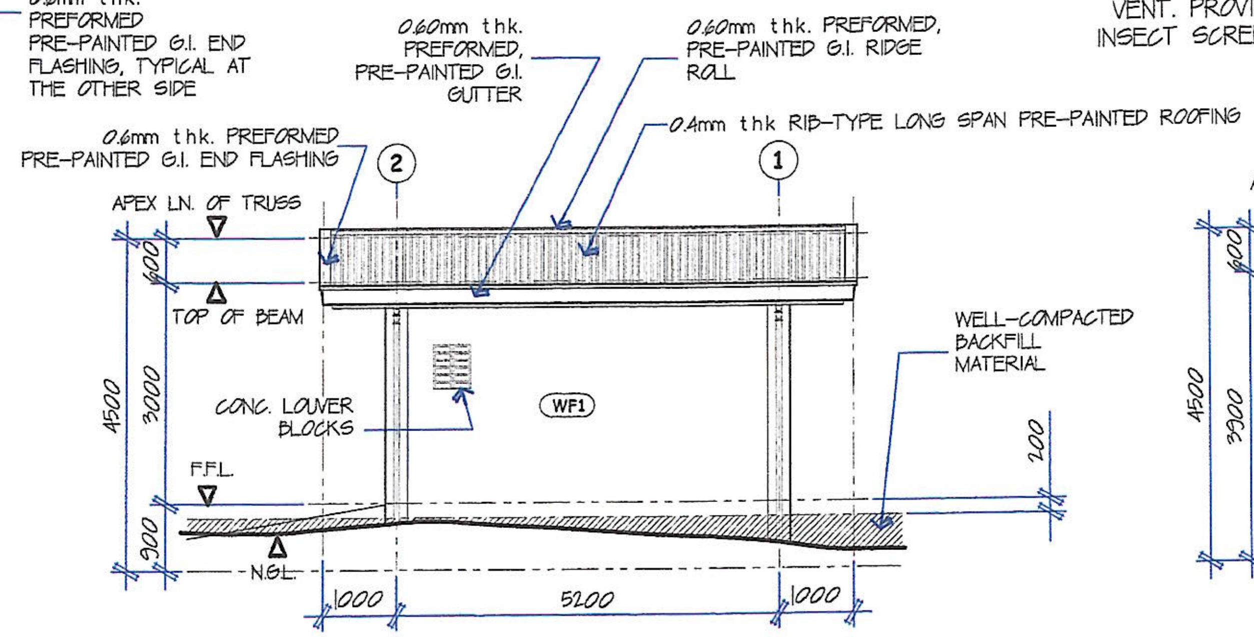

05 A-02 REAR ELEVATION (PUMPHOUSE)
SCALE : 1 : 100 M

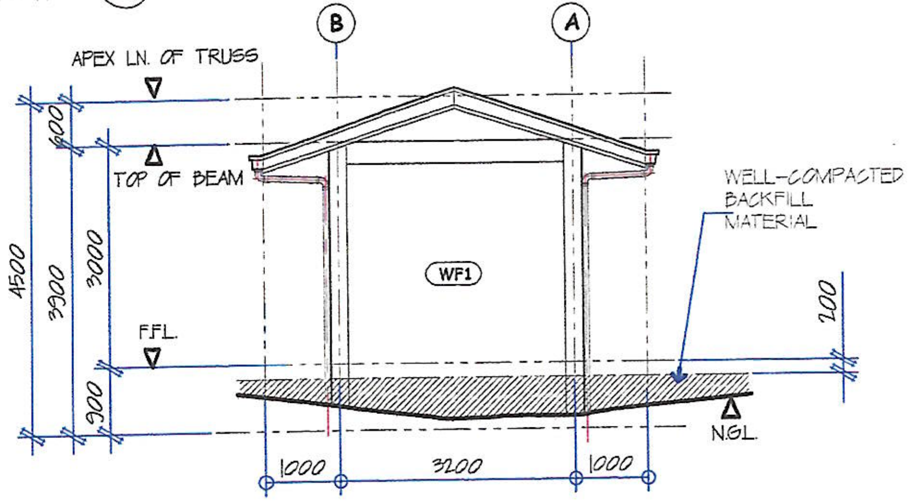

04 A-02 LEFT SIDE ELEVATION (PUMPHOUSE)
SCALE : 1 : 100 M

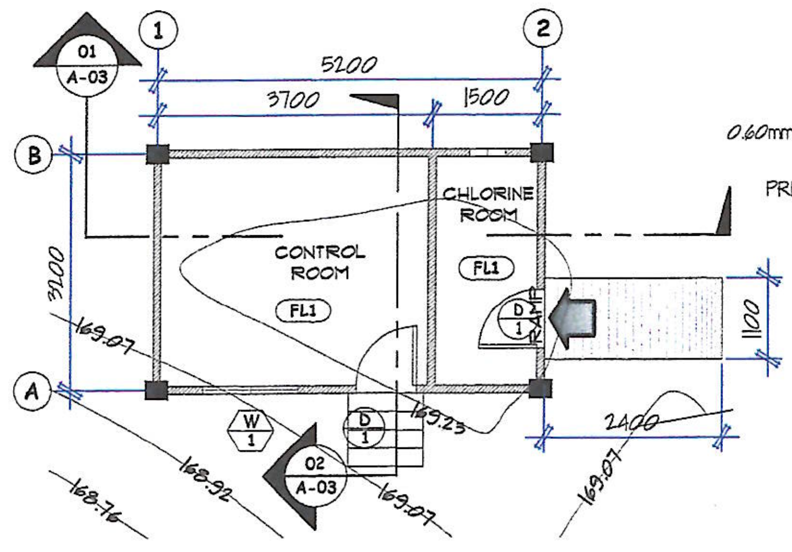

01 A-02 FLOOR PLAN (PUMPHOUSE)
SCALE : 1 : 100 M

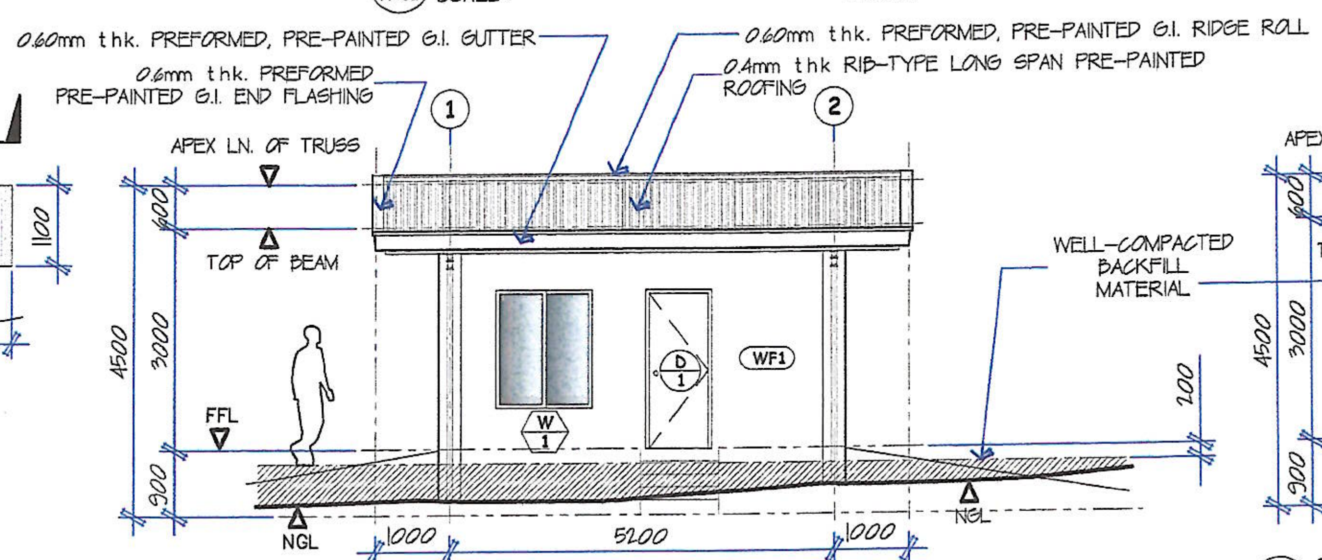

02 A-02 FRONT ELEVATION (PUMPHOUSE)
SCALE : 1 : 100 M

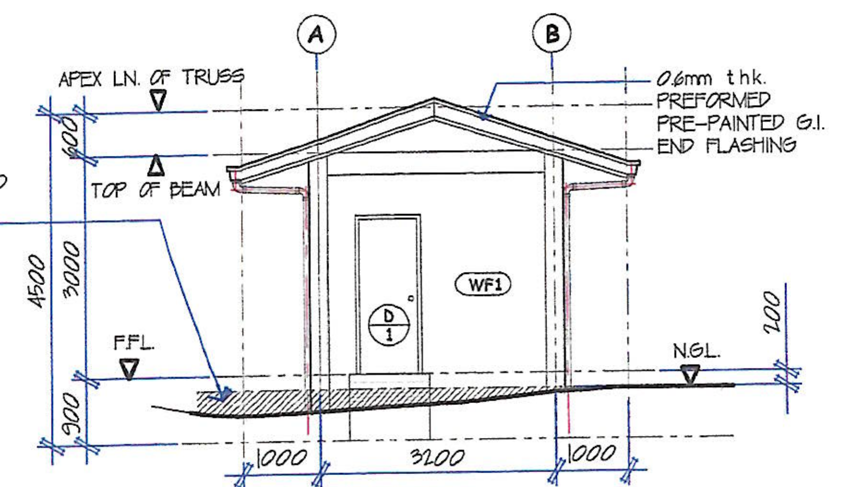

03 A-02 RIGHT SIDE ELEVATION (PUMPHOUSE)
SCALE : 1 : 100 M

GENERAL SANTOS CITY WATER DISTRICT
E. FERNANDEZ STREET, BRGY. LAGAO, GEN. SANTOS CITY
ENGINEERING & CONSTRUCTION DEPARTMENT
PLANNING AND DESIGN DIVISION
TEL. NO.: (083) 552 - 3824

NOELLE JUSTINE B. ESPESOR
REGISTERED ARCHITECT
PRC Reg. No. : 0052090
PTR No. :
Issued On : JAN. 2, 2025
Issued At : GENERAL SANTOS CITY
TIN : 737-426-913-000

PROJECT AND LOCATION: PROPOSED CONSTRUCTION OF PUMPHOUSE & GENSET SHED
LOT 965-G-1, BRGY. MABUHAY, GEN. SANTOS CITY

REVIEWED: ENGR. MARIA CELIA N. DANDAN, DEPARTMENT MANAGER, ECD

RECOMMEND APPROVAL: ENGR. ROGELIO A. BESANA, JR., AGM, OTS

APPROVED: FRANCISCO R. DOLOD, JR., CPA, CESE, ACTING GENERAL MANAGER

SHEET CONTENTS: AS SHOWN

DRAWN BY: | REV. NO. |
CHECKED BY: | DATE: Apr 2025

SHEET NO. A-02

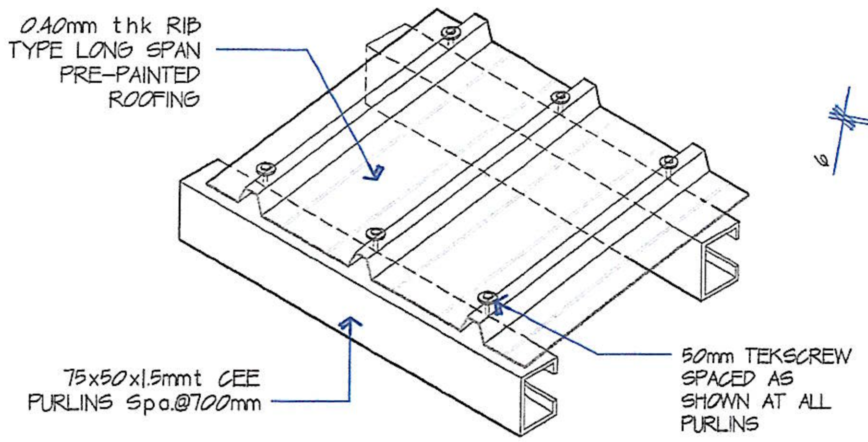

ISOMETRIC VIEW OF ROOFING TO PURLINS CONNECTION

07 A-03 NOT TO SCALE

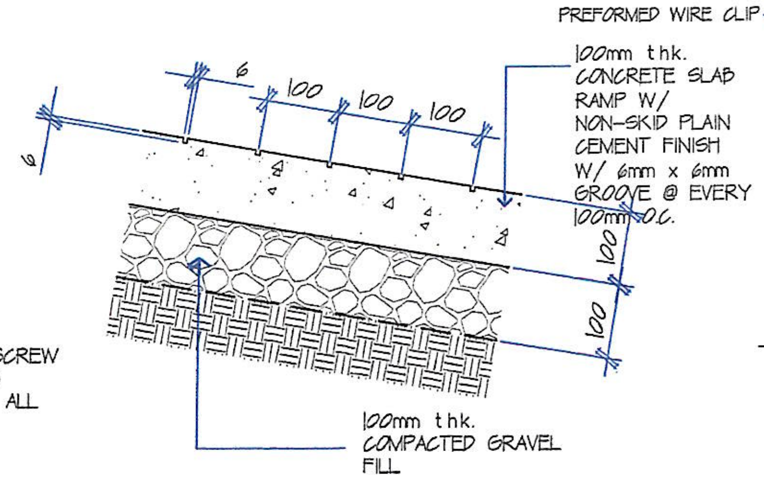

05 A-03 SPOT DETAIL SCALE : 1:10 M

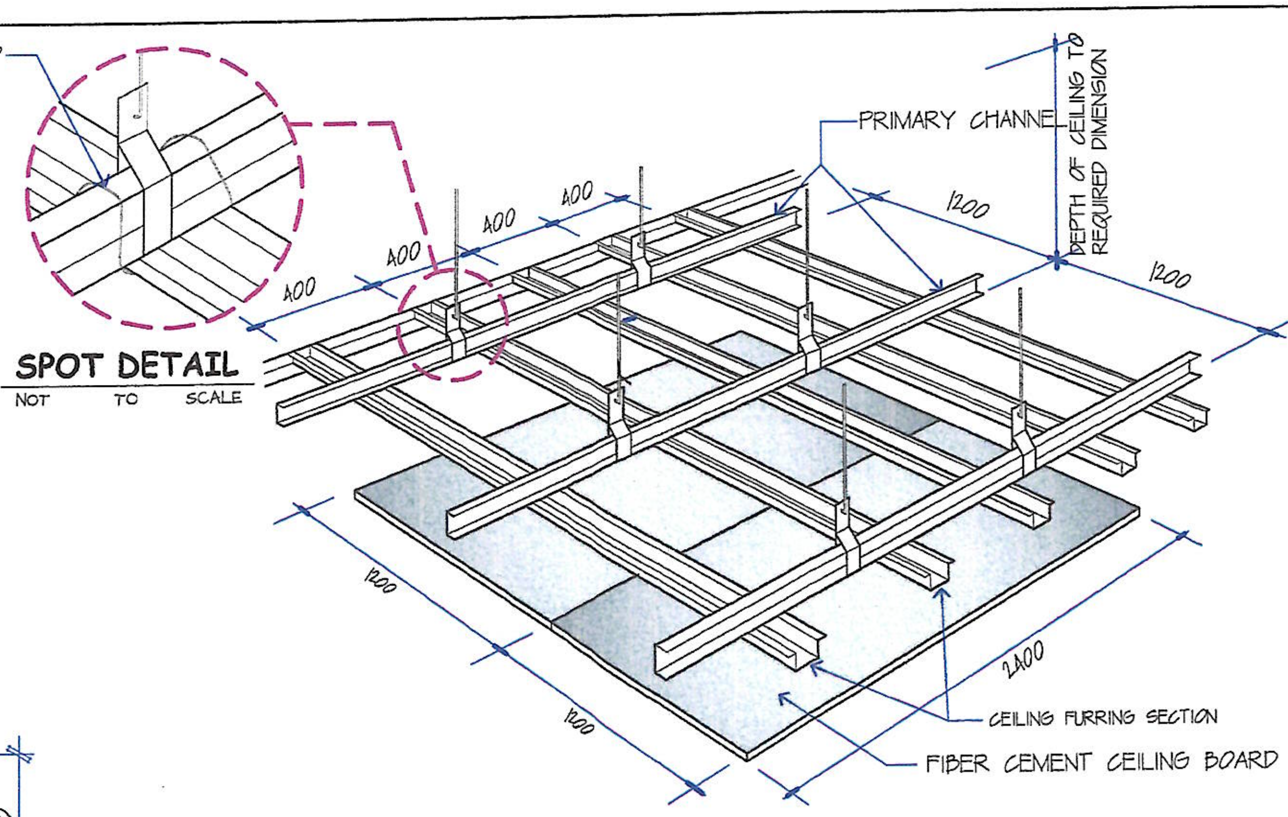

06 A-03 PERSPECTIVE, CLI (PUMPHOUSE) NOT TO SCALE

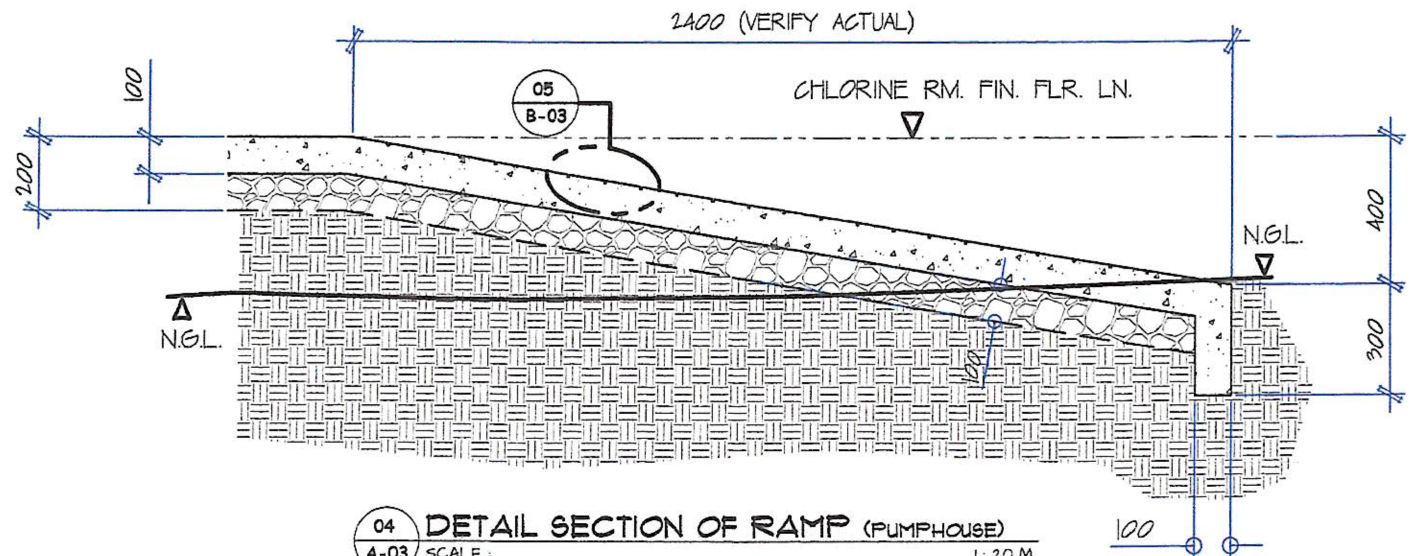

04 A-03 DETAIL SECTION OF RAMP (PUMPHOUSE) SCALE : 1:20 M

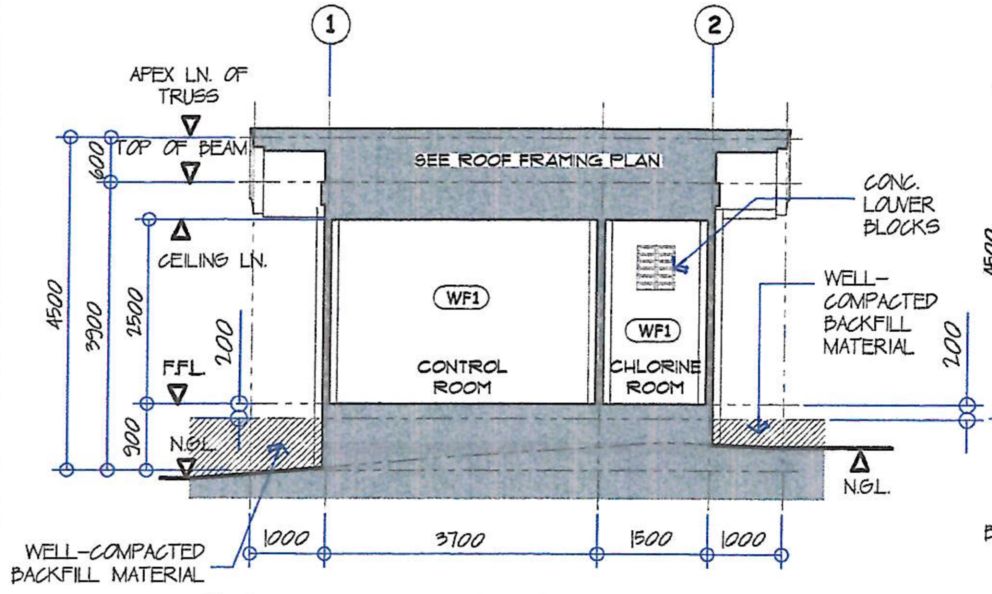

01 A-03 LONGITUDINAL SECTION (PUMPHOUSE) SCALE : 1:100 M

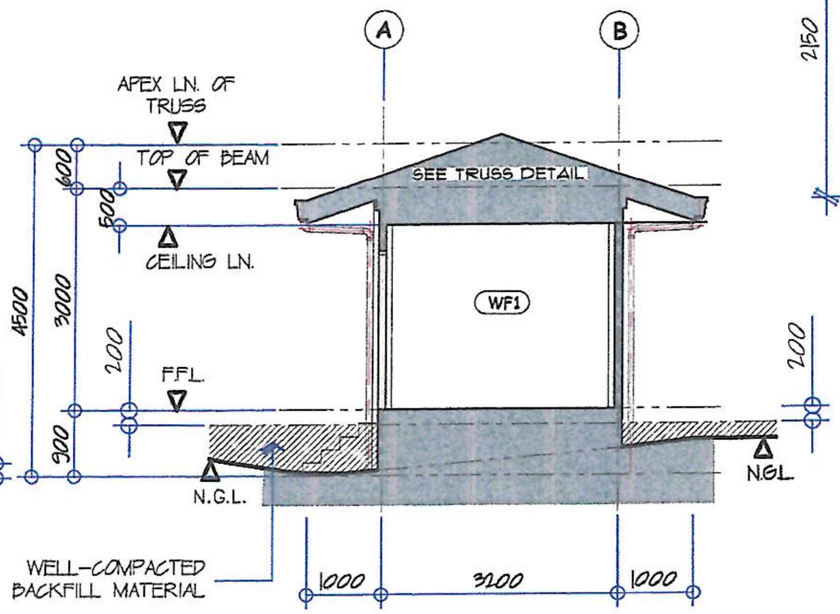

02 A-03 CROSS SECTION (PUMPHOUSE) SCALE : 1:100 M

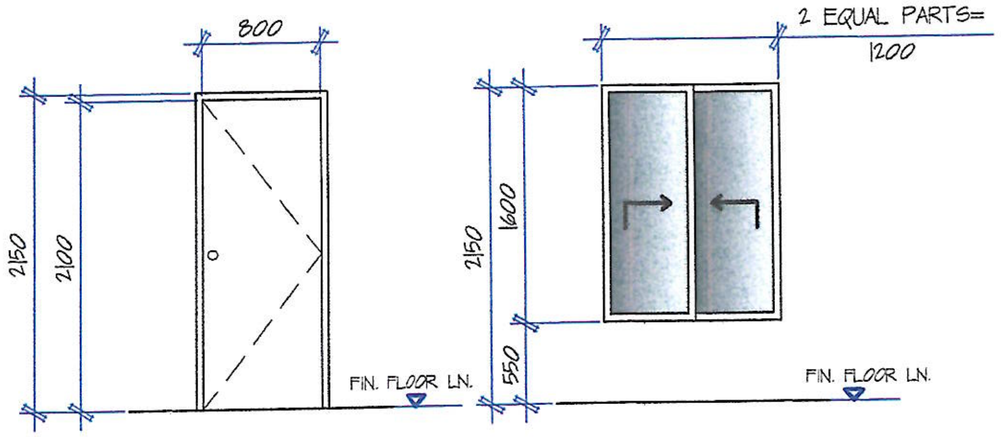

MARK	D 1	W 1
DESCRIPTION	40mm thk HOLLOW CORE FLUSH DOOR TYPE IN 50 x 150 KD DOOR JAMB WITH 6mm thk MARINE PLYWOOD DOUBLE FACING PAINT FINISH WITH COMPLETE ACCESSORIES	SLIDING WINDOW IN POWDER COATED FINISH ALUMINUM FRAME WITH 6mm thk TINTED GLASS PANEL WITH COMPLETE ACCESSORIES
LOCATION	CONTROL ROOM, CHLORINE ROOM	CONTROL ROOM
QUANTITY	TWO (2) SETS	ONE (1) SET

03 A-03 SCHEDULE OF DOORS & WINDOWS (PUMPHOUSE) SCALE : 1:50 M

GENERAL SANTOS CITY WATER DISTRICT
E. FERNANDEZ STREET, BRGY. LAGAO, GEN. SANTOS CITY
ENGINEERING & CONSTRUCTION DEPARTMENT
PLANNING AND DESIGN DIVISION
TEL. NO.: (083) 552 - 3624

NOELLE JUSTINE B. ESPESOR
REGISTERED ARCHITECT
PRC Reg. No. : 0052090
PTR No. : TIN 6615299 04A
Issued On : DATE: JAN. 2, 2025
Issued At : GENERAL SANTOS CITY
TIN : 737-426-913-000

PROJECT AND LOCATION: PROPOSED CONSTRUCTION OF PUMPHOUSE & GENSET SHED
LOT 965-G-1, BRGY. MABUHAY, GEN. SANTOS CITY

REVIEWED: ENGR. MARIA CELIA N. DANDAN, DEPARTMENT MANAGER, ECD

RECOMMEND APPROVAL: ENGR. ROGELIO A. BESANA, JR., AGM, OTS

APPROVED: FRANCISCO R. ... OD, JR., CPA, CESE, ACTING GENERAL MANAGER

SHEET CONTENTS: AS SHOWN

DRAWN BY: Dey-Rae | REV. NO. | CHECKED BY: | DATE: Apr 2025

SHEET NO. A-03

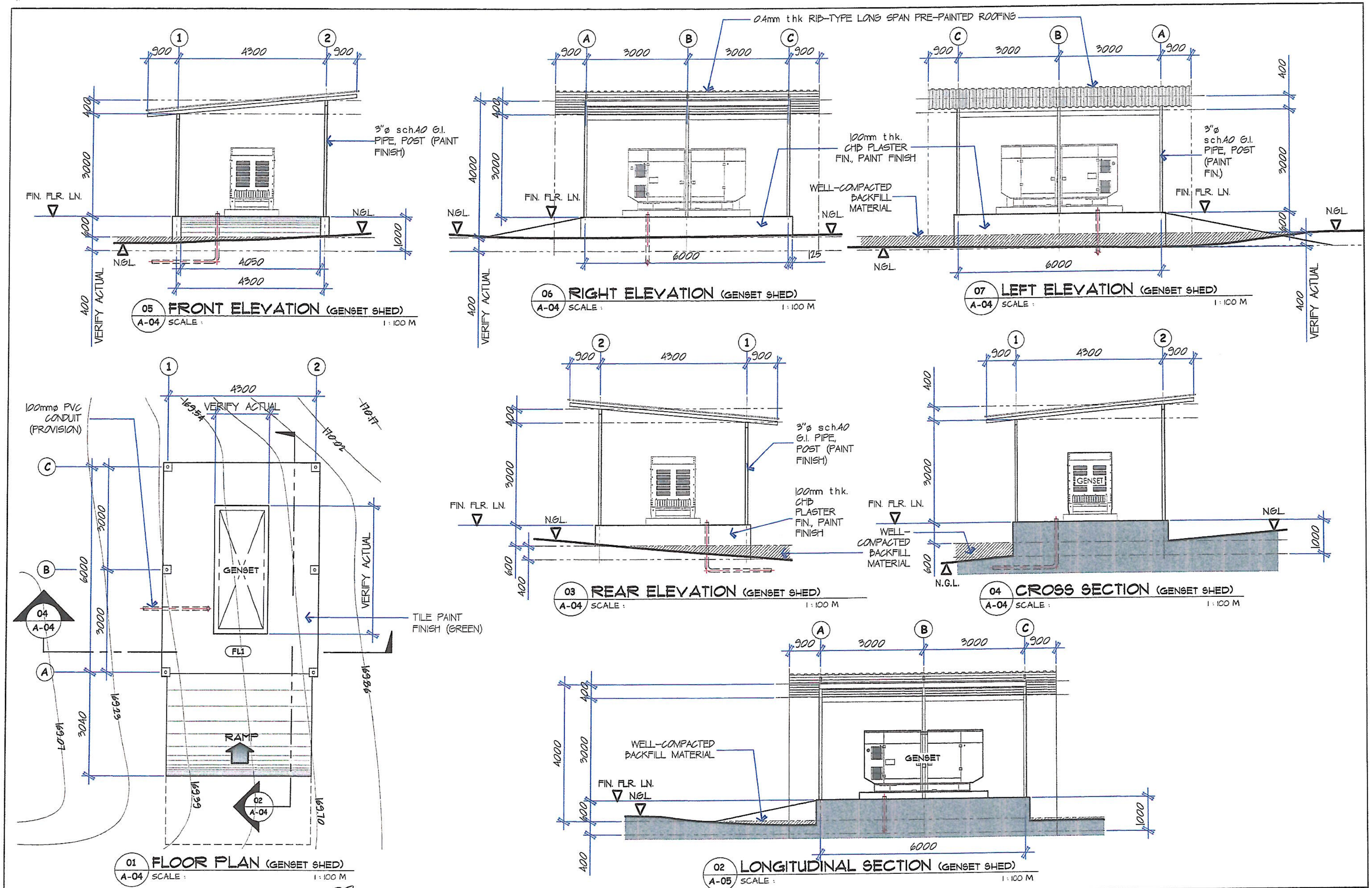

GENERAL SANTOS CITY WATER DISTRICT E. FERNANDEZ STREET, BRGY. LAGAO, GEN. SANTOS CITY ENGINEERING & CONSTRUCTION DEPARTMENT PLANNING AND DESIGN DIVISION TEL. NO.: (083) 552 - 3824	NOELLE JUSTINE B. ESPESOR REGISTERED ARCHITECT PRC Reg. No. : 0052090 PTR No. : TIN ... Issued On : DATE: JAN. 2, 2025 Issued At : GENERAL SANTOS CITY TIN : 737-426-913-000	PROJECT AND LOCATION PROPOSED CONSTRUCTION OF PUMPHOUSE & GENSET SHED LOT 965-G-1, BRGY. MABUHAY, GEN. SANTOS CITY	REVIEWED: ENGR. MARIA CELIA N. DANDAN DEPARTMENT MANAGER, ECD	RECOMMEND APPROVAL: ENGR. ROGELIO A. BESANA, JR. AGM, OTS	APPROVED: FRANCISCO R. ALOLOD, JR., CPA, CESE ACTING GENERAL MANAGER	SHEET CONTENTS: AS SHOWN DRAWN BY: REV. NO. CHECKED BY: DATE: Apr 2025 SHEET NO. A-04 04 / 15

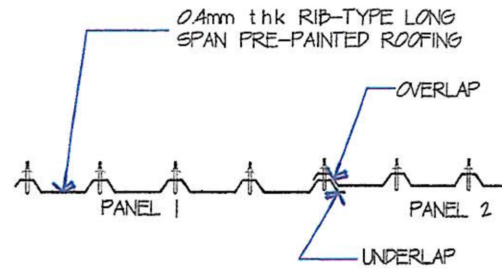

04 A-05 **ROOF PANEL SIDE LAP DETAIL** (GENSET SHED)
NOT TO SCALE

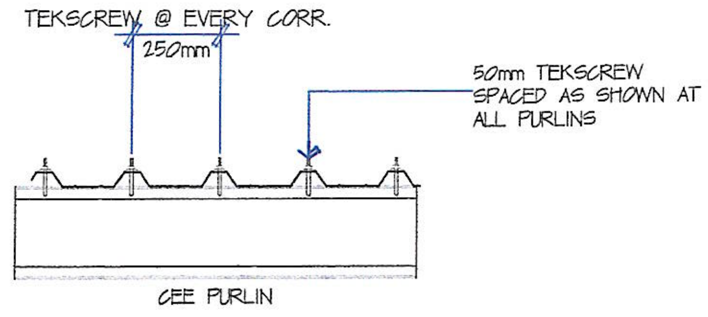

05 A-05 **TEKSCREW SPACING** (GENSET SHED)
NOT TO SCALE

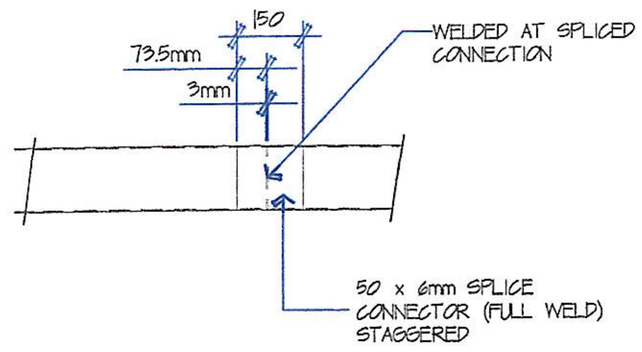

06 A-05 **PURLIN SPLICE** (GENSET SHED)
NOT TO SCALE

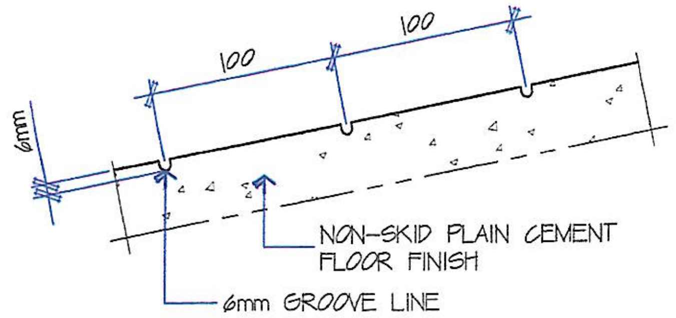

03 A-05 **DETAIL SECTION** (GENSET SHED)
SCALE: 1:4 M

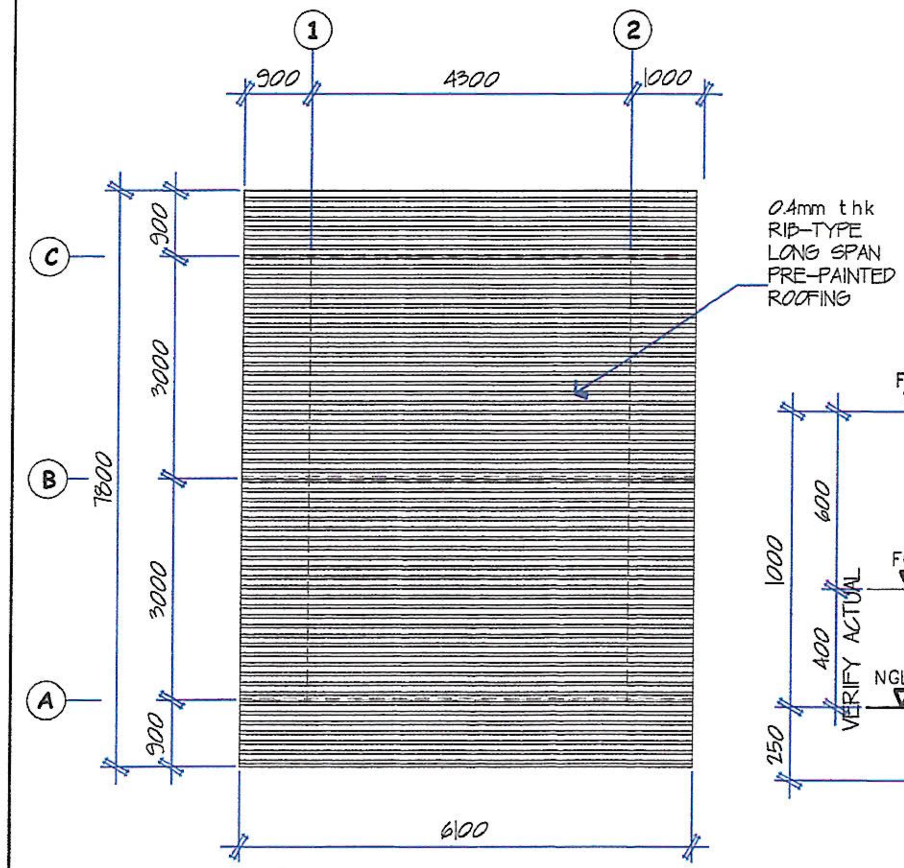

01 A-05 **ROOF PLAN** (GENSET SHED)
SCALE: 1:100 M

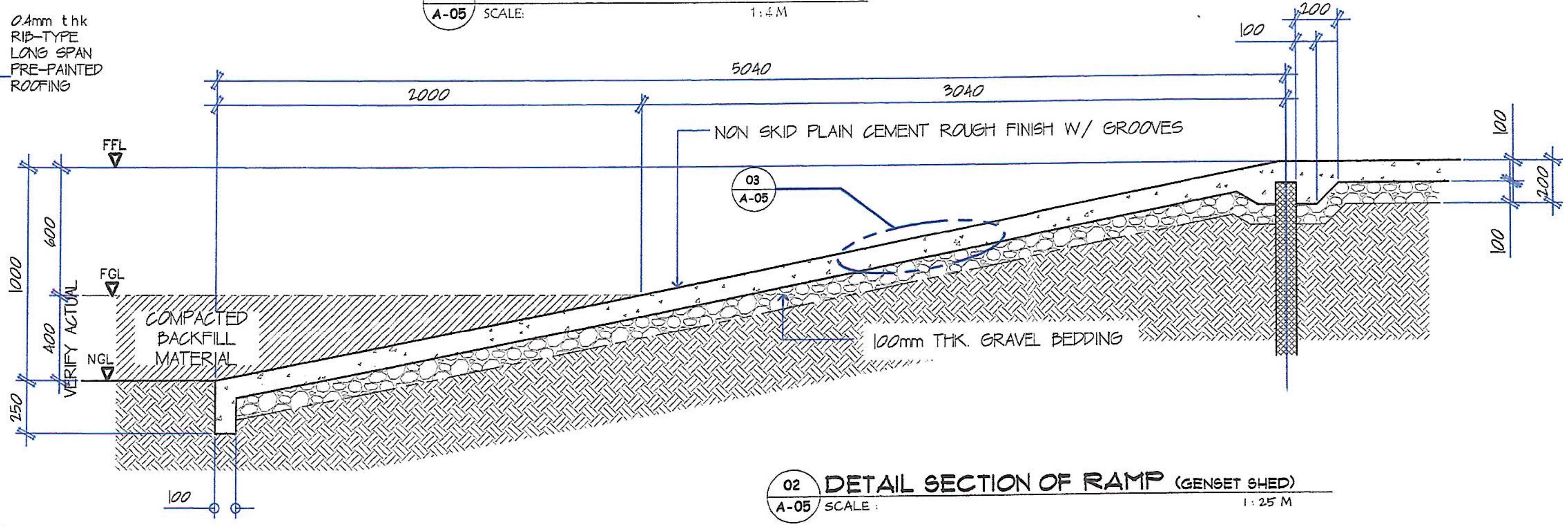

02 A-05 **DETAIL SECTION OF RAMP** (GENSET SHED)
SCALE: 1:25 M

GENERAL SANTOS CITY WATER DISTRICT E. FERNANDEZ STREET, BRGY. LAGAO, GEN. SANTOS CITY ENGINEERING & CONSTRUCTION DEPARTMENT PLANNING AND DESIGN DIVISION TEL. NO.: (083) 552 - 3824	NOELLE JUSTINE B. ESPESOR REGISTERED ARCHITECT LICENSED ARCHITECT PRC Reg. No.: 0052090 PTR No. : TIN 615121904A Issued On : DATE: JAN 2, 2025 Issued At : GENERAL SANTOS CITY TIN : 737-426-913-000	PROJECT AND LOCATION PROPOSED CONSTRUCTION OF PUMPHOUSE & GENSET SHED LOT 965-G-1, BRGY. MABUHAY, GEN. SANTOS CITY	REVIEWED: ENGR. MARIA CELIA N. DANDAN DEPARTMENT MANAGER, ECD	RECOMMEND APPROVAL: ENGR. ROGELIO A. BESANA, JR. AGM, OTS	APPROVED: FRANCISCO R. ALOLOD, JR., CPA, CESE ACTING GENERAL MANAGER	SHEET CONTENTS AS SHOWN DRAWN BY: [signature] REV. NO. CHECKED BY: DATE: Apr 2025	SHEET NO. A-05 05 / 15

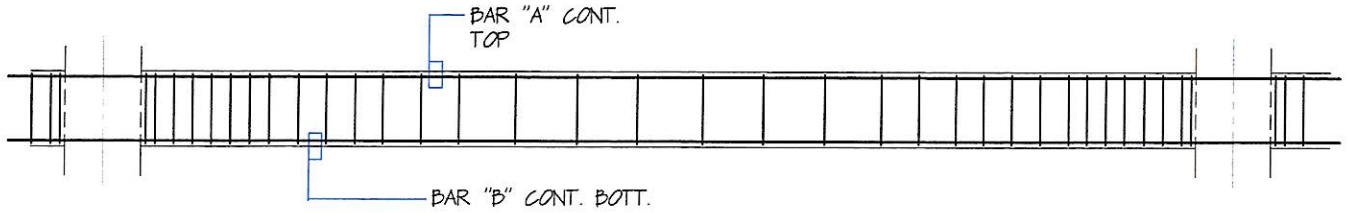

05 S-01 **TYP. R.C. BEAM ELEVATION (PUMPHOUSE)**
NOT TO SCALE

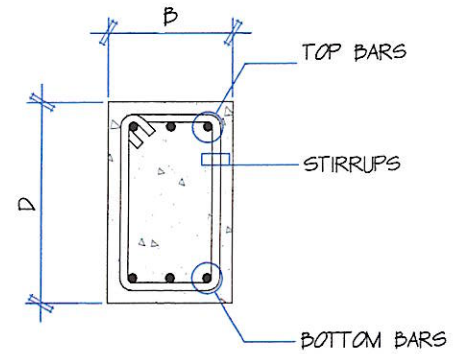

TYP. R.C. BEAM SECTION

SPACING OF STIRRUPS
A - Ø10mm - 1@50, 6@100, 4@150, 2@200, REST @ 300mm O.C.

BEAM MARK	SIZES		REINFORCEMENT		SPACING OF STIRRUPS
	WIDTH	DEPTH	BAR"A"	BAR"B"	
	B	D	CONT. TOP	CONT. BOTT.	
RCB-1	200	300	3 - Ø12mm	3 - Ø12mm	A

NOTE:

ALL REINFORCEMENT BARS SHALL BE GRADE 40 UNLESS OTHERWISE SPECIFIED IN THE DRAWING

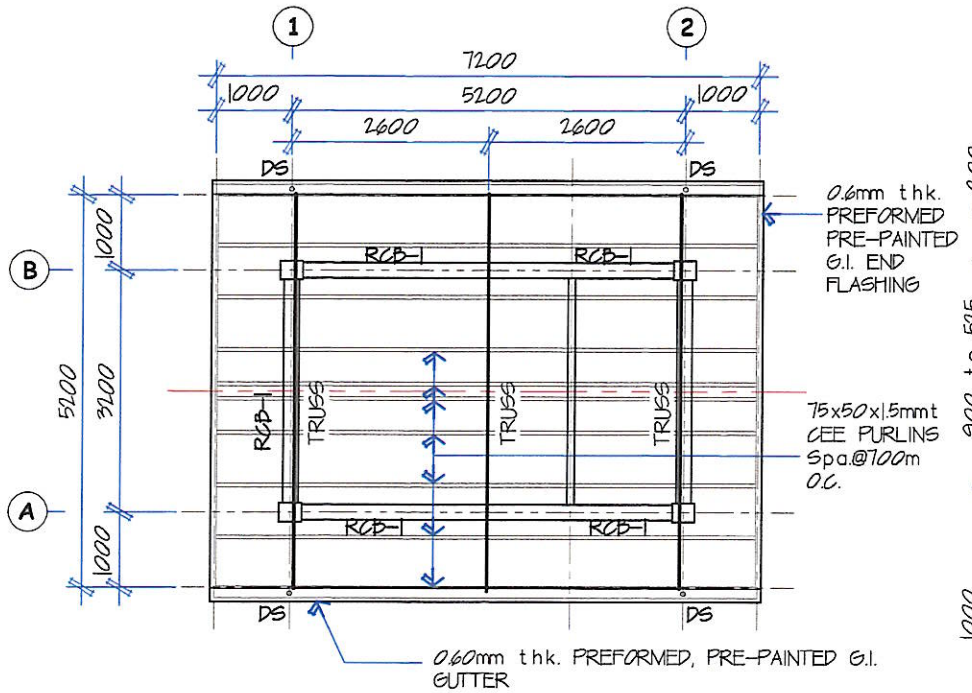

02 S-01 **ROOF FRAMING PLAN (PUMPHOUSE)**
SCALE : 1 : 100 M

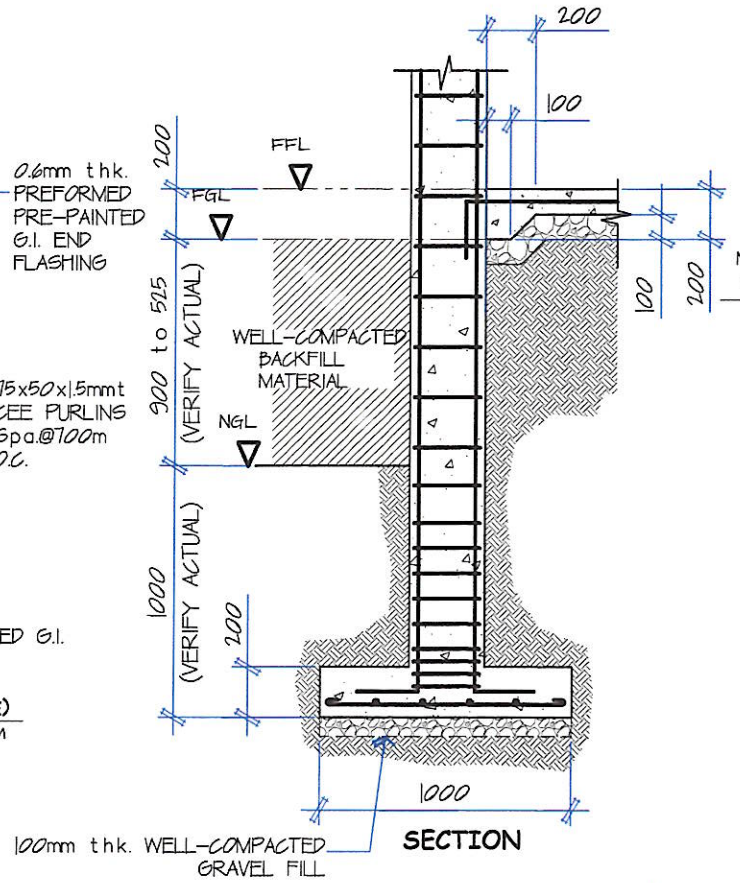

SECTION

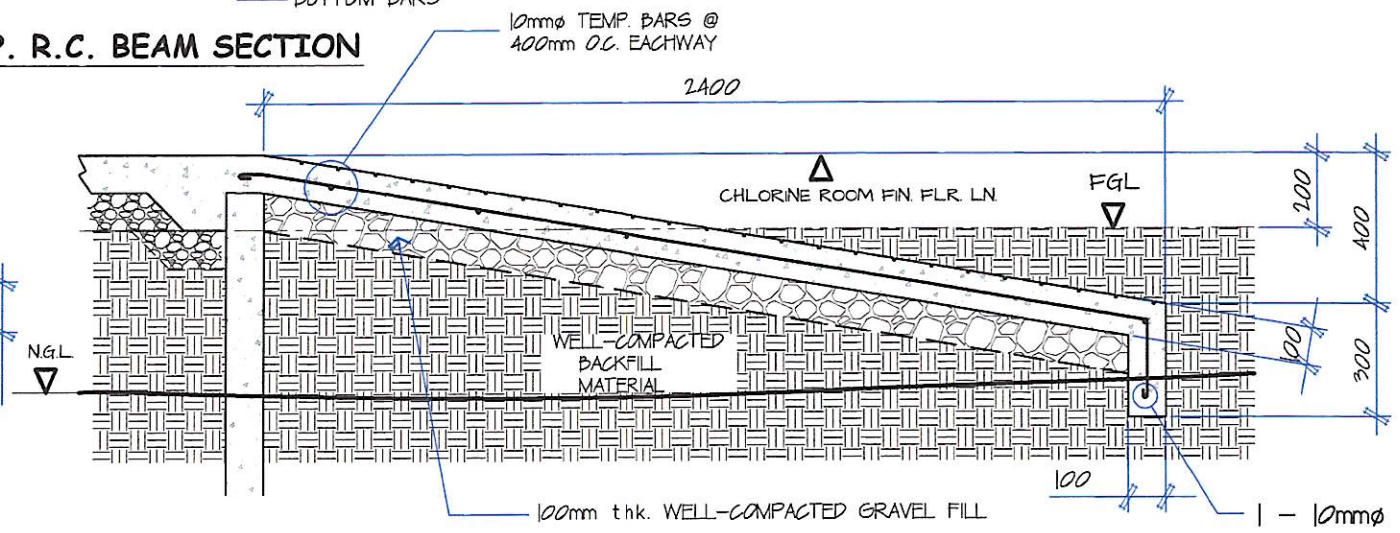

06 S-01 **DETAIL SECTION OF R.C. RAMP (PUMPHOUSE)**
SCALE : 1 : 20 M

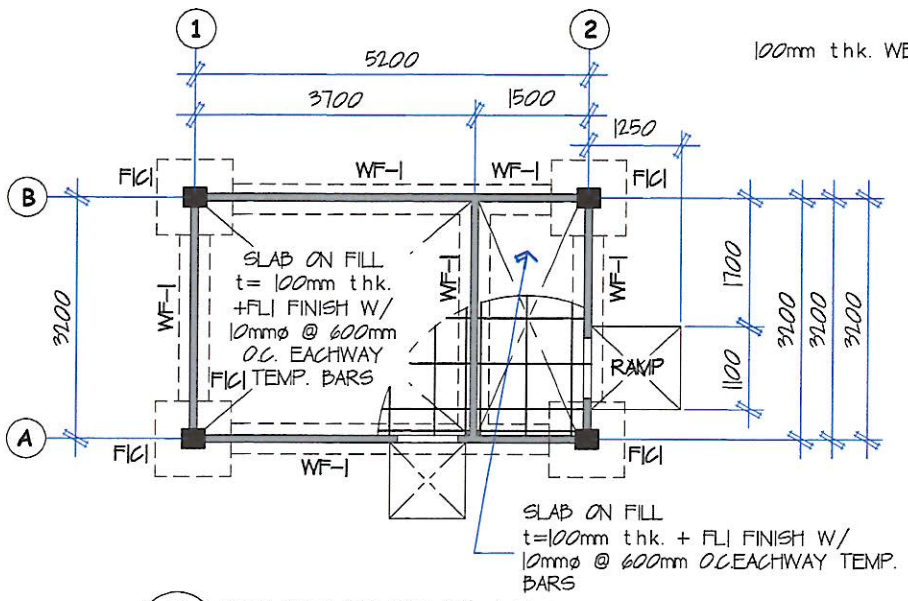

01 S-01 **FOUNDATION PLAN (PUMPHOUSE)**
SCALE : 1 : 100 M

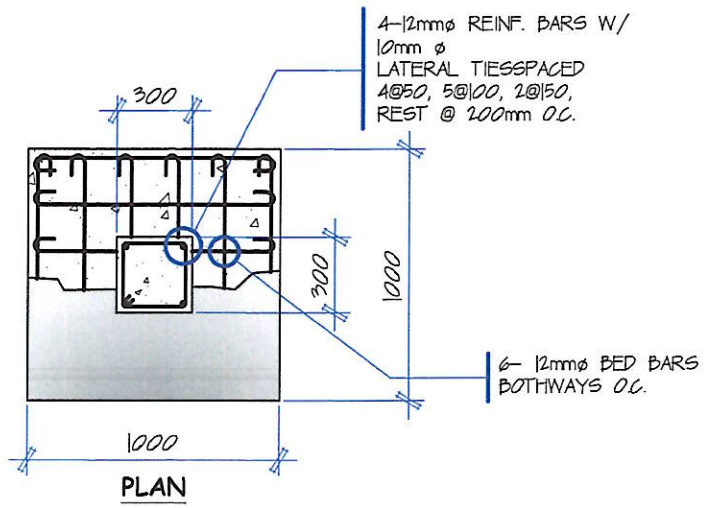

PLAN

03 S-01 **FICI DETAIL (PUMPHOUSE)**
SCALE : 1 : 30 M

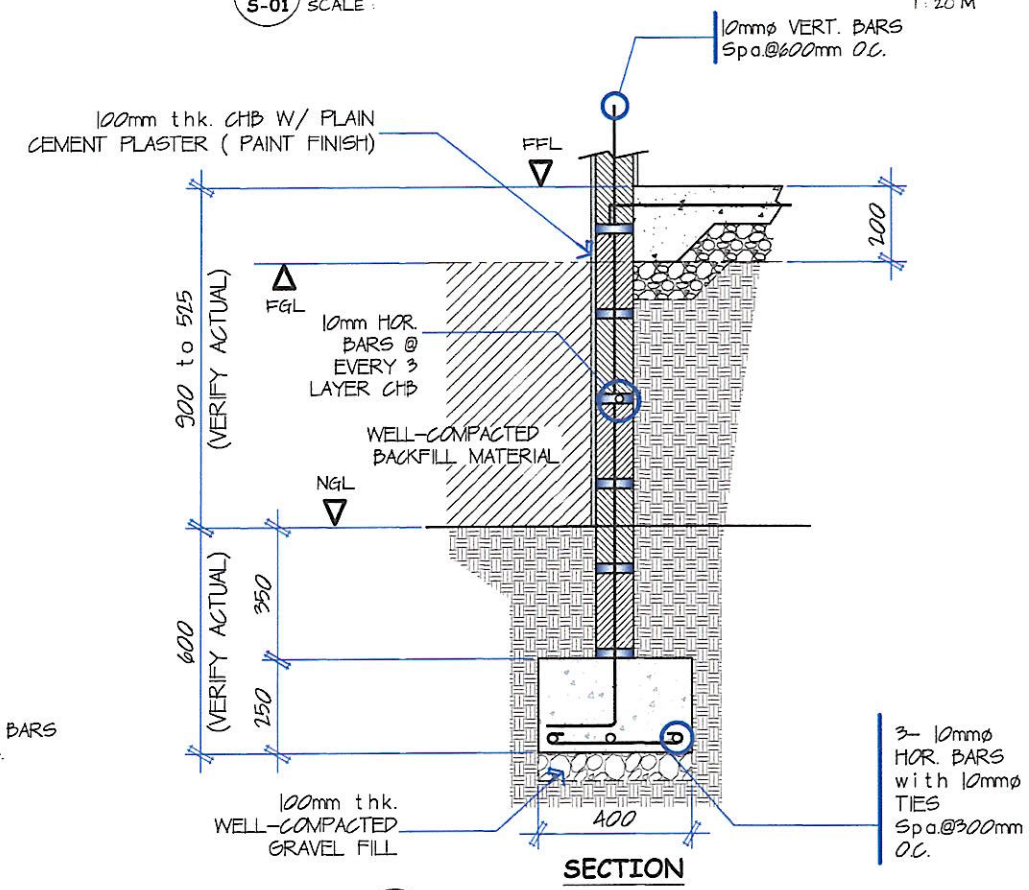

SECTION

04 S-01 **WF-1 DETAIL (PUMPHOUSE)**
SCALE : 1 : 20 M

GENERAL SANTOS CITY WATER DISTRICT E. FERNANDEZ STREET, BRGY. LAGAO, GEN. SANTOS CITY ENGINEERING & CONSTRUCTION DEPARTMENT PLANNING AND DESIGN DIVISION TEL. NO.: (083) 552 - 3824	DANILO M. HORLADOR, JR. CIVIL ENGINEER REG. NO. 0107545 TIN. NO. 291-941-997 PTR. NO. 1539180A DATE : 01/09/2025	PROJECT AND LOCATION PROPOSED CONSTRUCTION OF PUMPHOUSE & GENSET SHED LOT 965-G-1, BRGY. MABUHAY, GEN. SANTOS CITY	REVIEWED: ENGR. MARIA CELIA N. DANDAN DEPARTMENT MANAGER, ECD	RECOMMEND APPROVAL: ENGR. ROGELIO A. BESANA, JR. AGM, OTS	APPROVED: FRANCISCO R. ALOLOD, JR., CPA, CESE ACTING GENERAL MANAGER	SHEET CONTENTS AS SHOWN DRAWN BY: Ding-Ree REV. NO. CHECKED BY: DATE : Apr 2025	SHEET NO. S-01 06 15

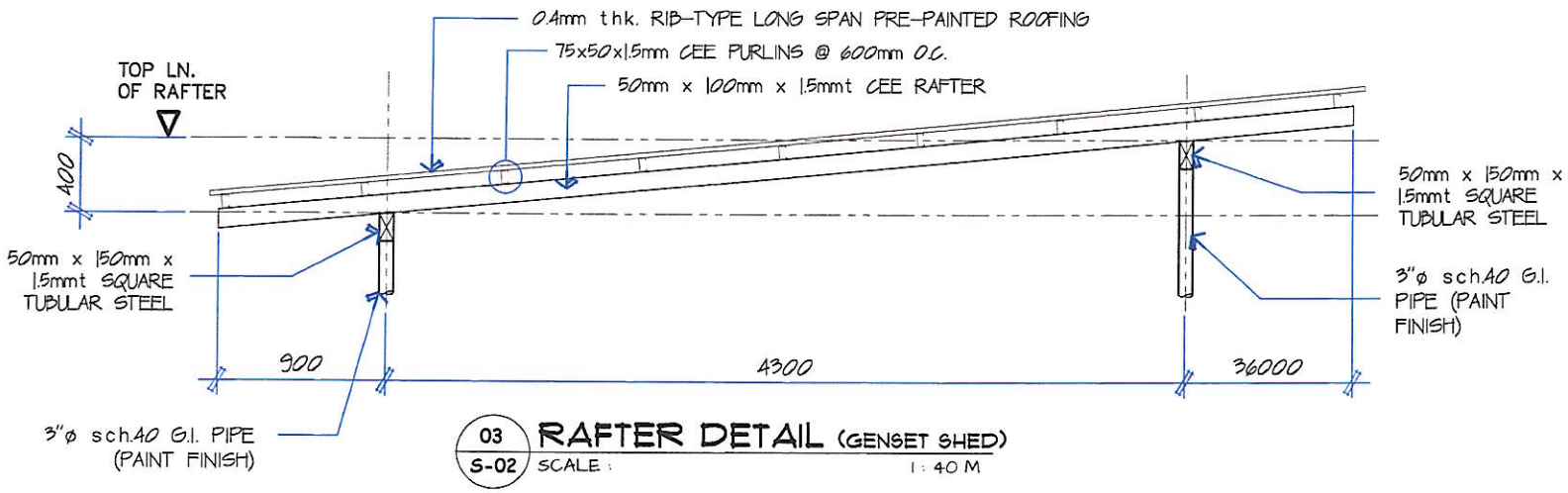

03 / S-02 **RAFTER DETAIL** (GENSET SHED)
SCALE : 1 : 40 M

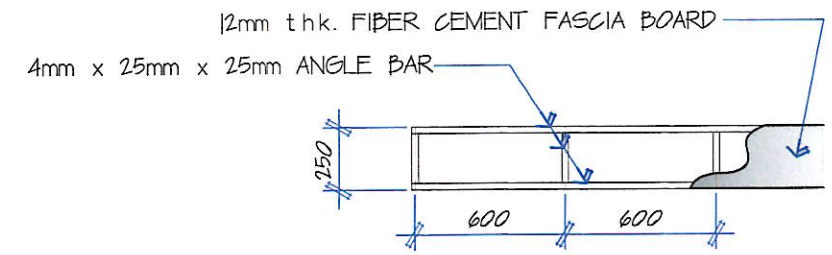

04 / S-02 **FASCIA FRAME DETAIL** (PUMPHOUSE)
SCALE : 1 : 30 M

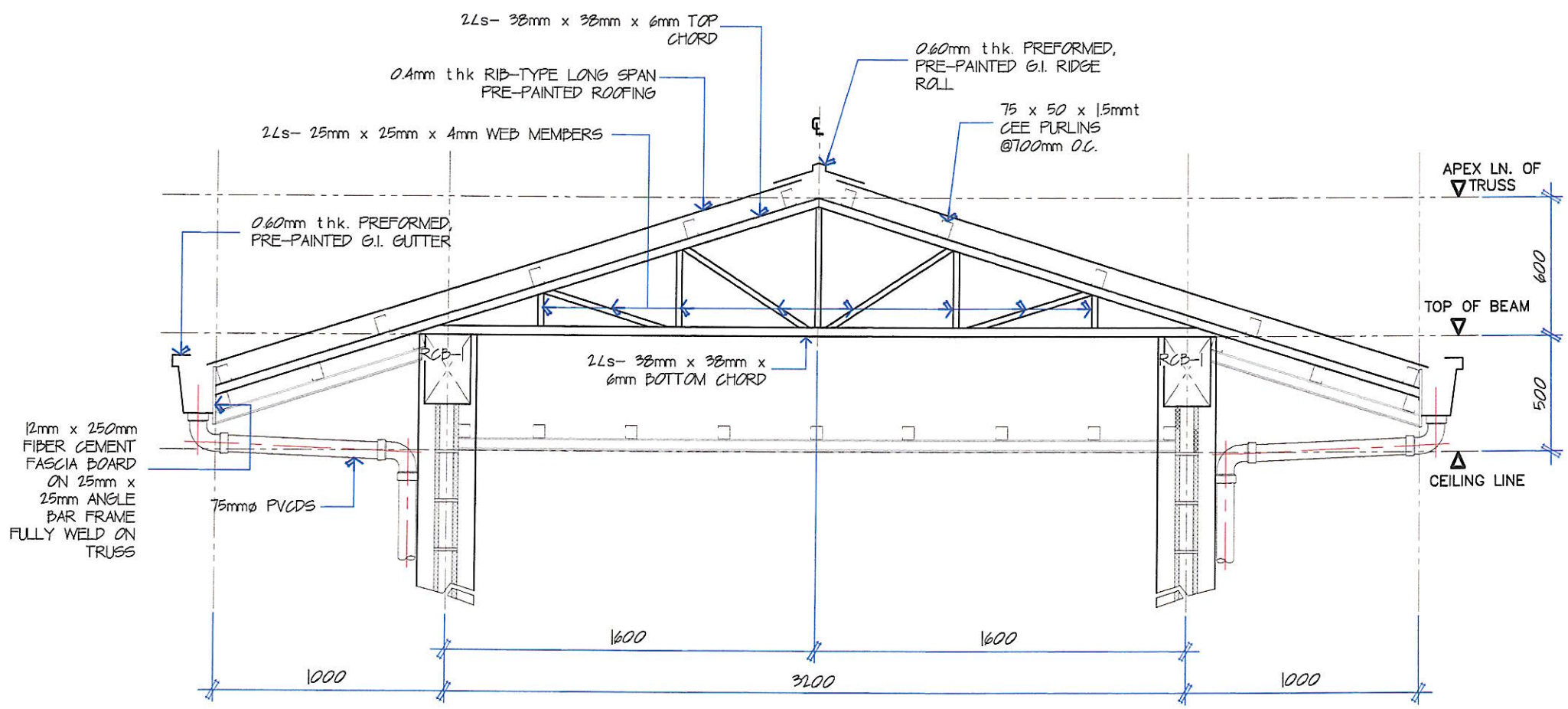

01 / S-02 **DETAIL ELEVATION OF TRUSS** (PUMPHOUSE)
SCALE : 1 : 25M

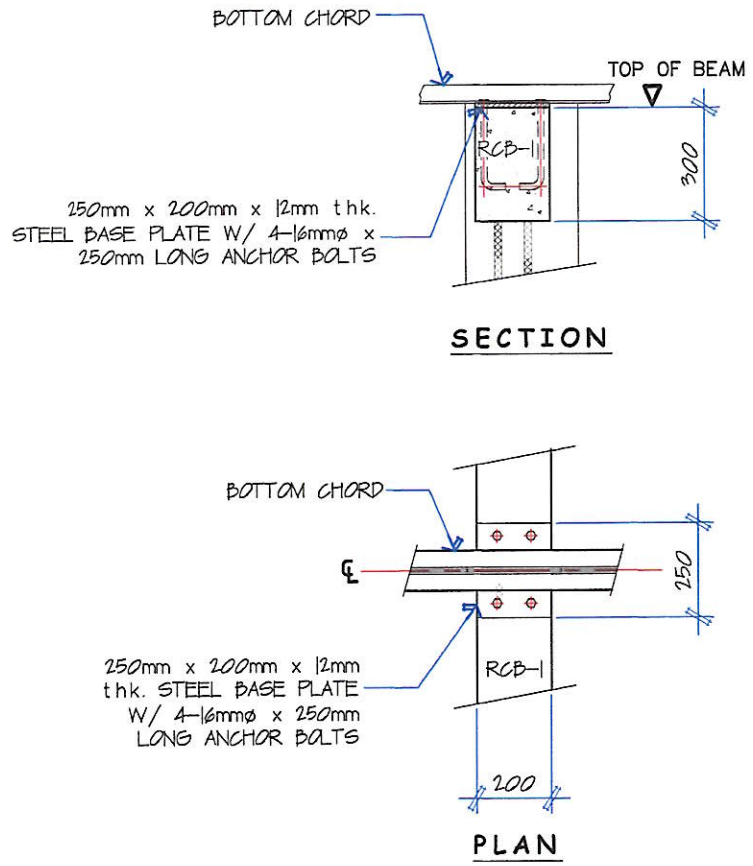

02 / S-02 **DETAIL OF TRUSS ANCHORAGE** (PUMPHOUSE)
SCALE : 1 : 20 M

GENERAL SANTOS CITY WATER DISTRICT E. FERNANDEZ STREET, BRGY. LAGAO, GEN. SANTOS CITY ENGINEERING & CONSTRUCTION DEPARTMENT PLANNING AND DESIGN DIVISION TEL. NO.: (083) 552 - 3824	DANILO M. HORLADOR, JR. CIVIL ENGINEER REG. NO. 0107545 / TIN. NO. 291-941-997 PTR. NO. 1539180A / DATE: 01/09/2025	PROJECT AND LOCATION PROPOSED CONSTRUCTION OF PUMPHOUSE ¢ GENSET SHED LOT 965-G-1, BRGY. MABUHAY, GEN. SANTOS CITY	REVIEWED: ENGR. MARIA CELIA N. DANDAN DEPARTMENT MANAGER, ECD	RECOMMEND APPROVAL: ENGR. ROGELIO A. BESANA, JR. AGM, OTS	APPROVED: FRANCISCO R. ALOLOD, JR., CPA, CESE ACTING GENERAL MANAGER	SHEET CONTENTS AS SHOWN DRAWN BY: Dug-Rae / REV. NO. CHECKED BY: / DATE: Apr 2025	SHEET NO. S-02 07 / 15

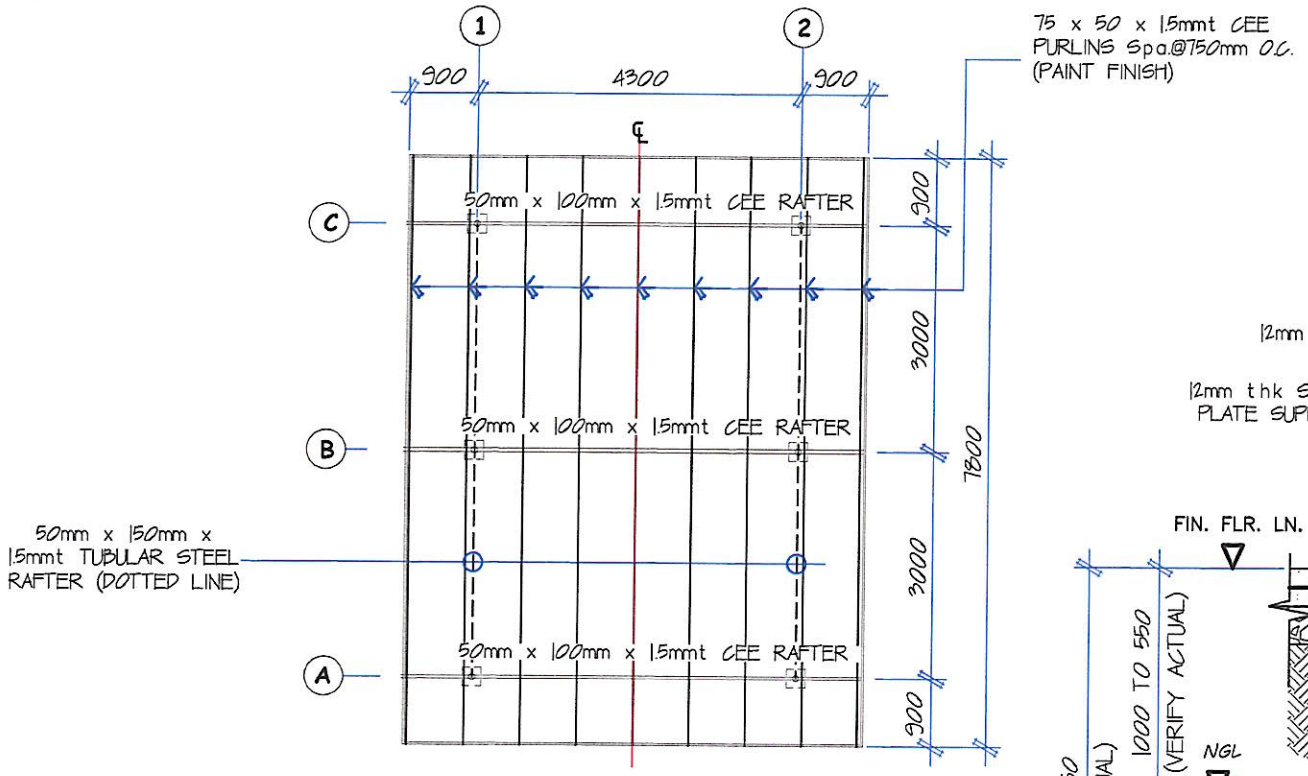

04 S-03 **ROOF FRAMING PLAN** (GENSET SHED)
SCALE : 1 : 100 M

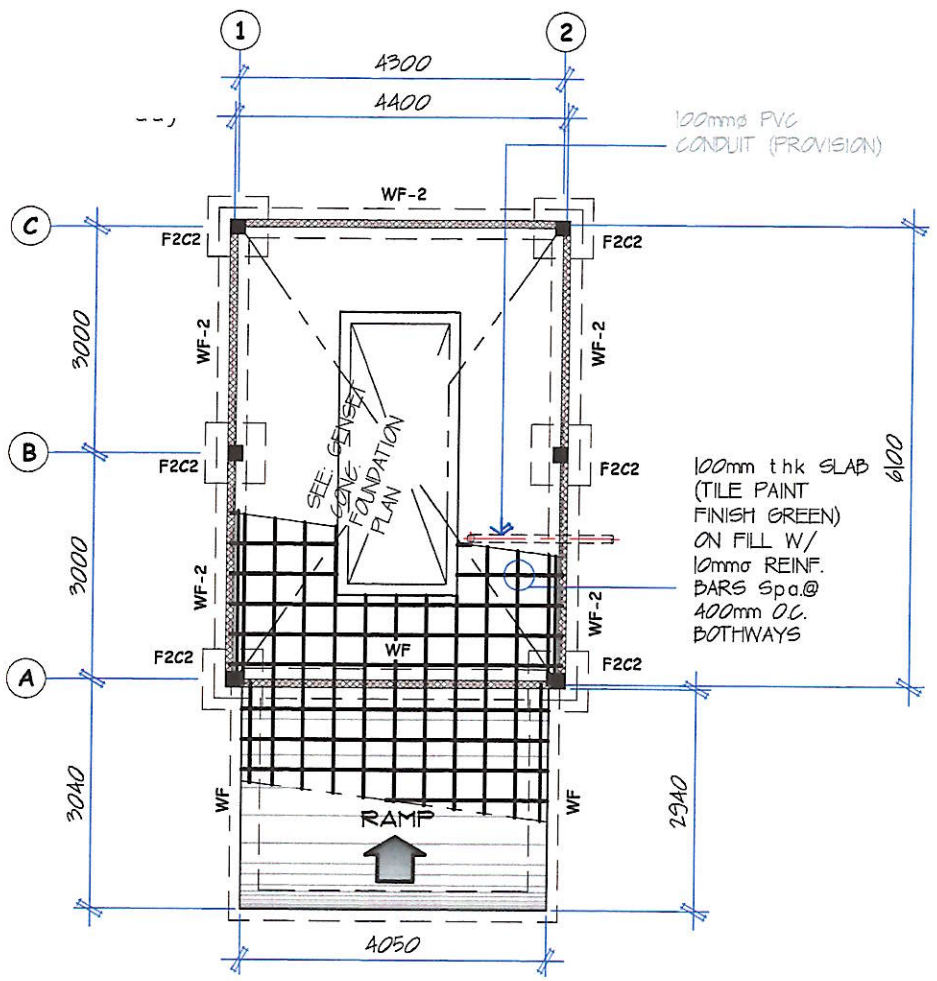

01 S-03 **FOUNDATION PLAN** (GENSET SHED)
SCALE : 1 : 100 M

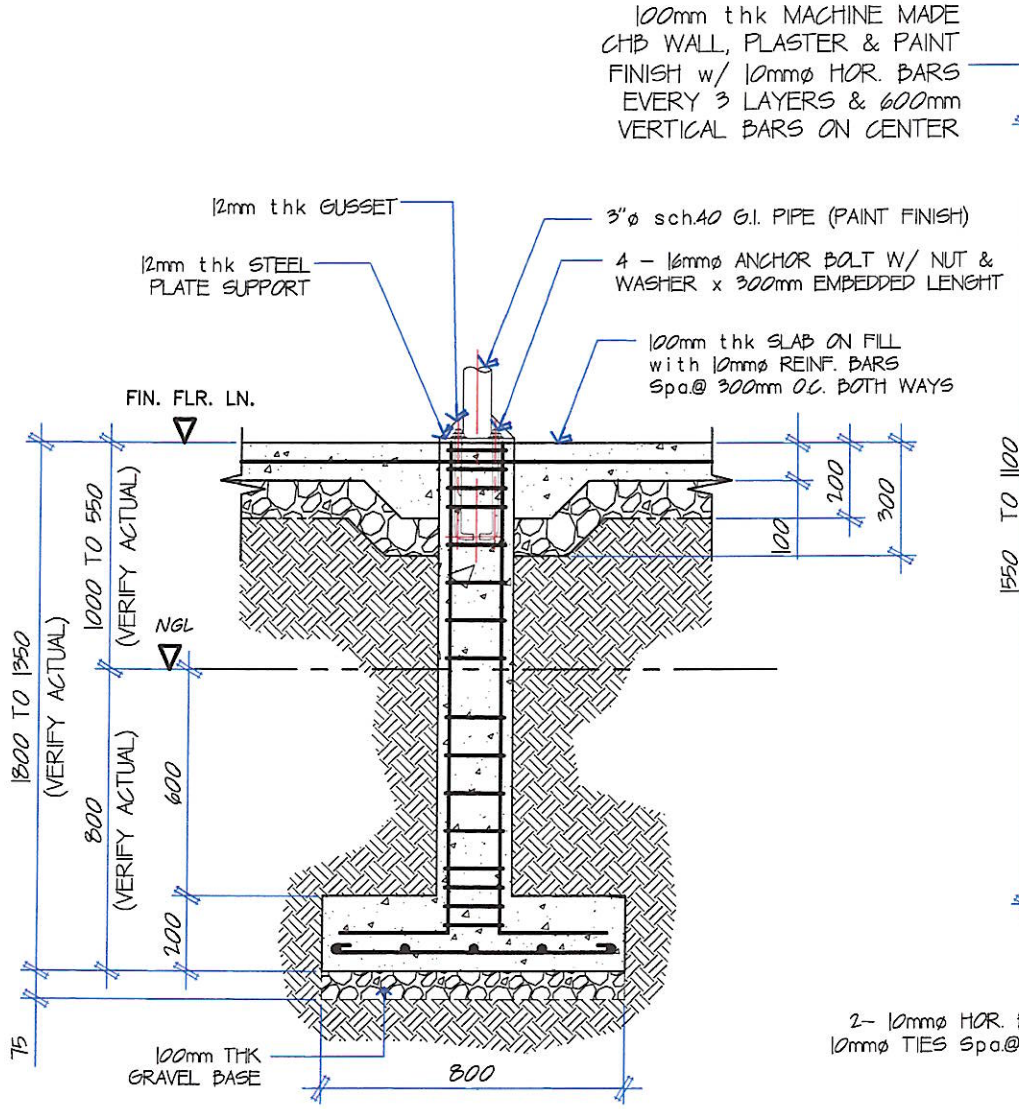

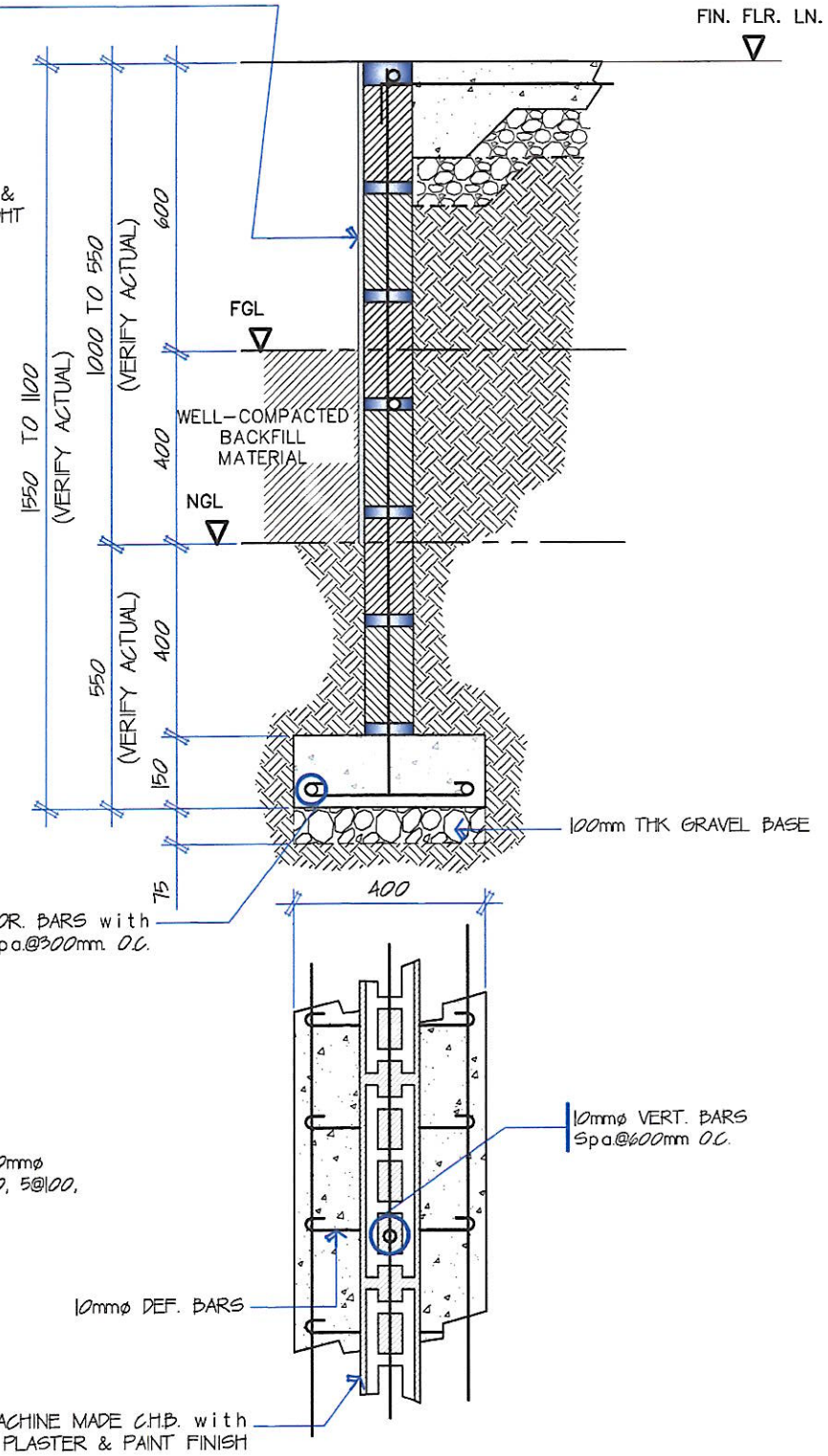

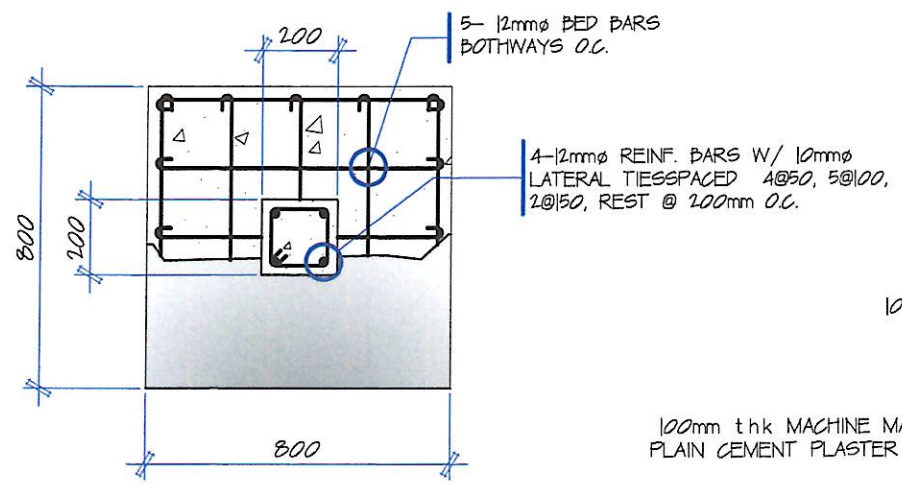

02 S-03 **F2C2 DETAIL** (GENSET SHED)
SCALE : 1 : 20 M

03 S-03 **WF-2 DETAIL** (GENSET SHED)
SCALE : 1 : 15 M

GENERAL SANTOS CITY WATER DISTRICT E. FERNANDEZ STREET, BRGY. LAGAO, GEN. SANTOS CITY ENGINEERING & CONSTRUCTION DEPARTMENT PLANNING AND DESIGN DIVISION TEL. NO.: (083) 552 - 3824	DANILO M. HORLADOR, JR. CIVIL ENGINEER REG. NO. 0107545 TIN. NO. 291-941-997 PTR. NO. 1539180A DATE: 01/09/2025	PROJECT AND LOCATION PROPOSED CONSTRUCTION OF PUMPHOUSE & GENSET SHED LOT 965-G-1, BRGY. MABUHAY, GEN. SANTOS CITY	REVIEWED: ENGR. MARIA CELIA N. DANDAN DEPARTMENT MANAGER, ECD	RECOMMEND APPROVAL: ENGR. ROGELIO A. BESANA, JR. AGM, OTS	APPROVED: FRANCISCO R. ALOLOD, JR., CPA, CESE ACTING GENERAL MANAGER	SHEET CONTENTS AS SHOWN DRAWN BY: Dug-Rec REV. NO. CHECKED BY: DATE: Apr 2025	SHEET NO. S-03 08 15

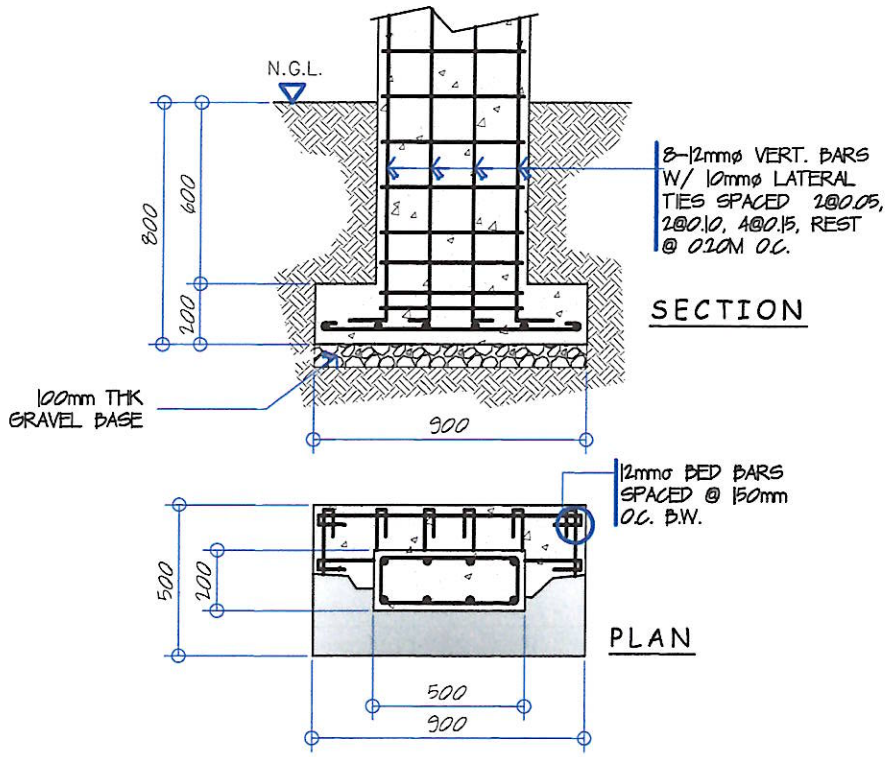

04 / S-04 CONCRETE PIPE SUPPORT DETAILS

SCALE : 1 : 25 M

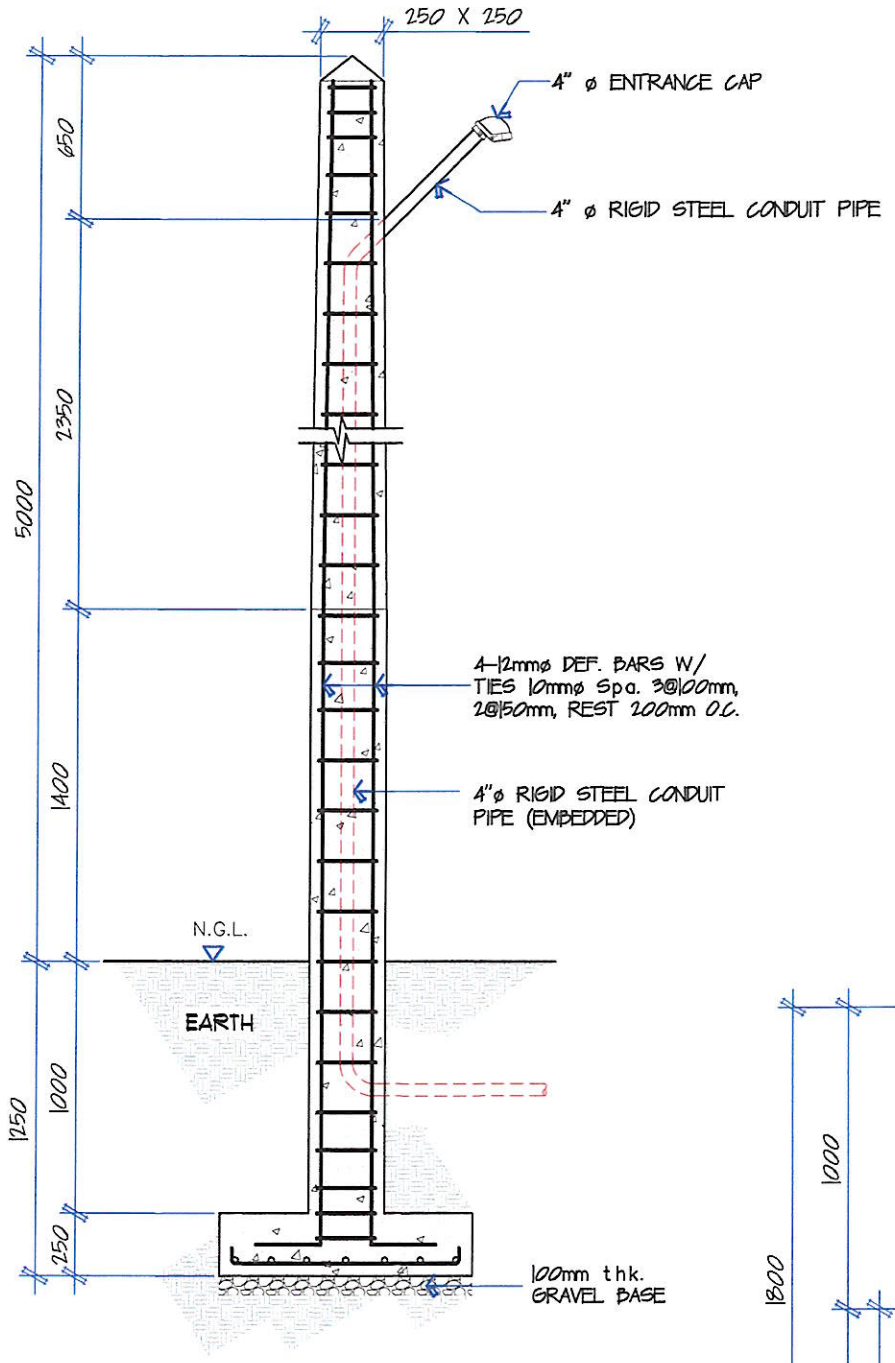

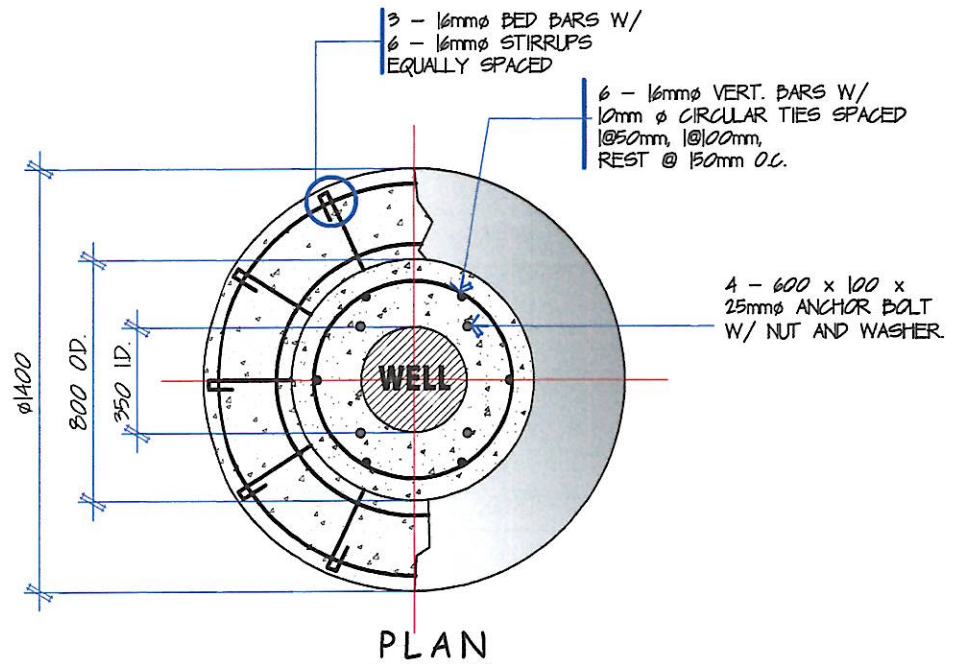

03 / S-04 DEEP WELL CONCRETE BASE DETAIL

SCALE : 1 : 25 M

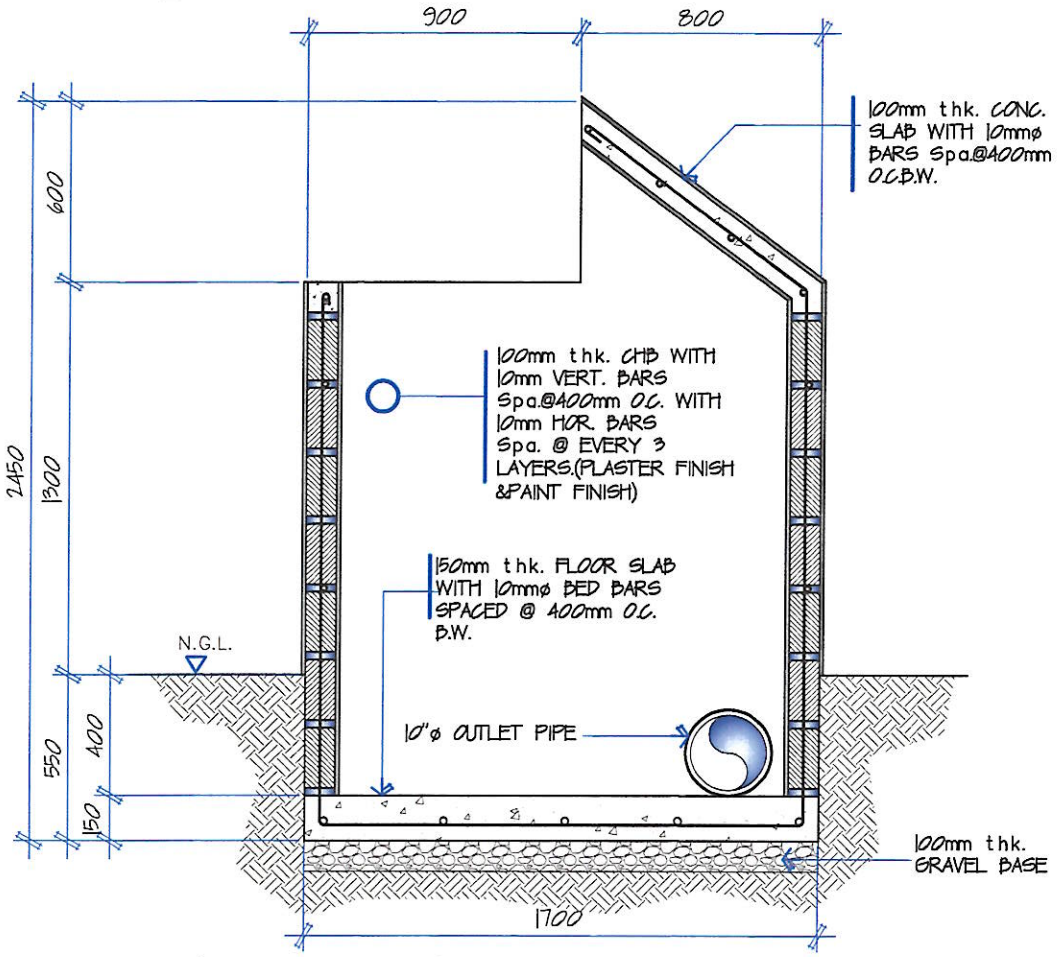

01 / S-04 LONGITUDINAL SECTION OF TEST LINE BOX

SCALE : 1 : 40 M

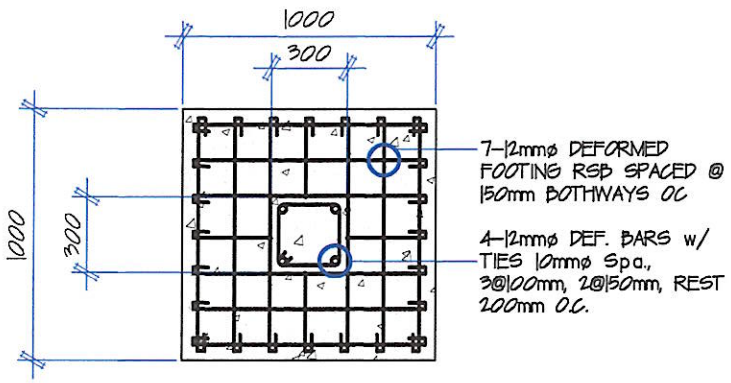

02 / S-04 ELECTRICAL SERVICE ENTRANCE PEDESTAL DETAIL

SCALE : 1 : 30 M

GENERAL SANTOS CITY WATER DISTRICT E. FERNANDEZ STREET, BRGY. LAGAO, GEN. SANTOS CITY ENGINEERING & CONSTRUCTION DEPARTMENT PLANNING AND DESIGN DIVISION TEL. NO.: (083) 552 - 3824	DANILO M. HORLADOR, JR. CIVIL ENGINEER REG. NO. 0107545 TIN. NO. 291-941-997 PTR. NO. 1539180A DATE: 01/09/2025	PROJECT AND LOCATION PROPOSED CONSTRUCTION OF PUMPHOUSE & GENSET SHED LOT 965-G-1, BRGY. MABUHAY, GEN. SANTOS CITY	REVIEWED: ENGR. MARIA CELIA N. DANDAN DEPARTMENT MANAGER, ECD	RECOMMEND APPROVAL: ENGR. ROGELIO A. BESANA, JR. AGM, OTS	APPROVED: FRANCISCO R. ALOLOD, JR., CPA, CESE ACTING GENERAL MANAGER	SHEET CONTENTS AS SHOWN DRAWN BY: Dwg-Rae REV. NO. CHECKED BY: DATE: Apr 2025	SHEET NO. S-04 09 15

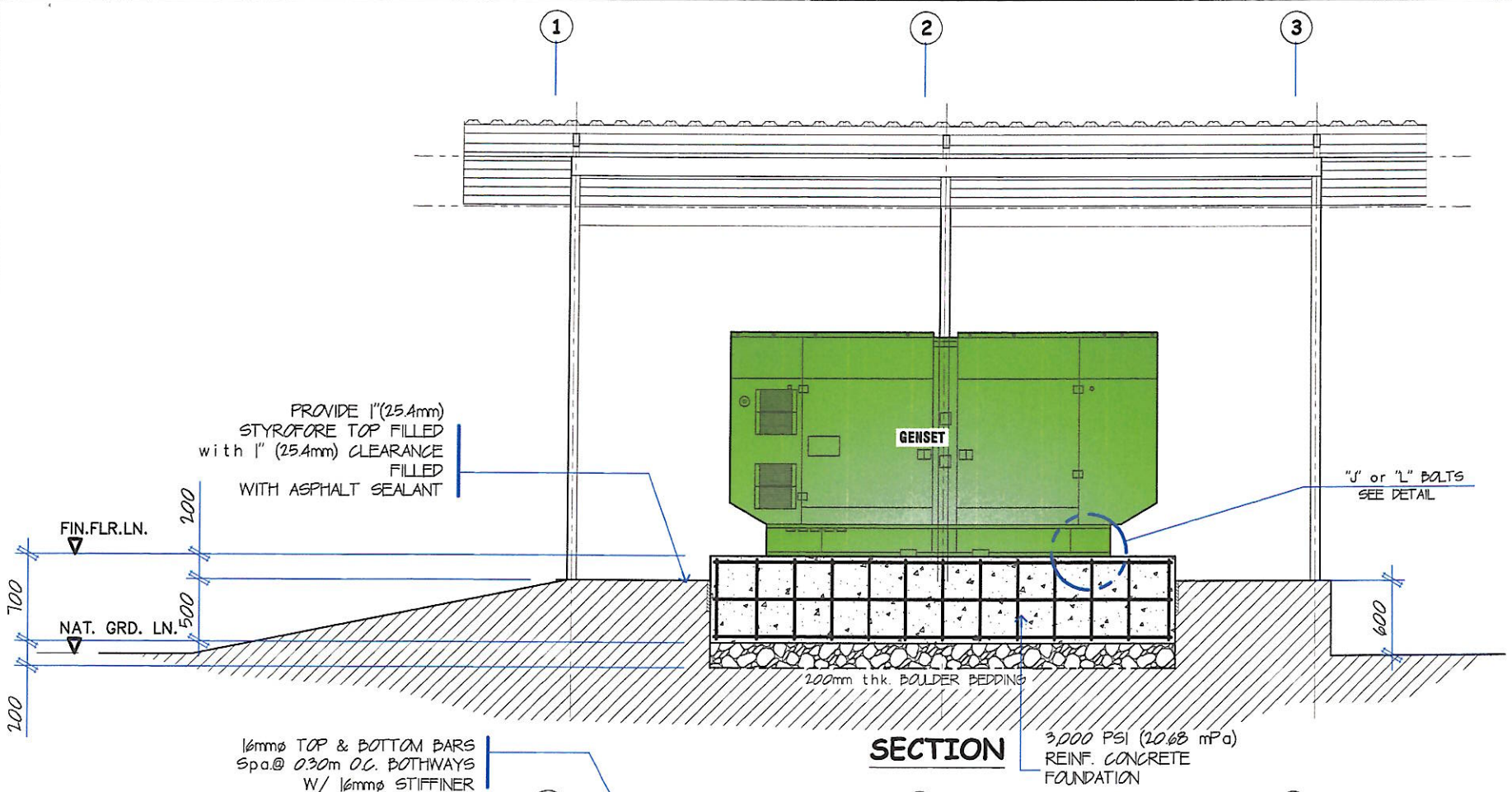

SECTION

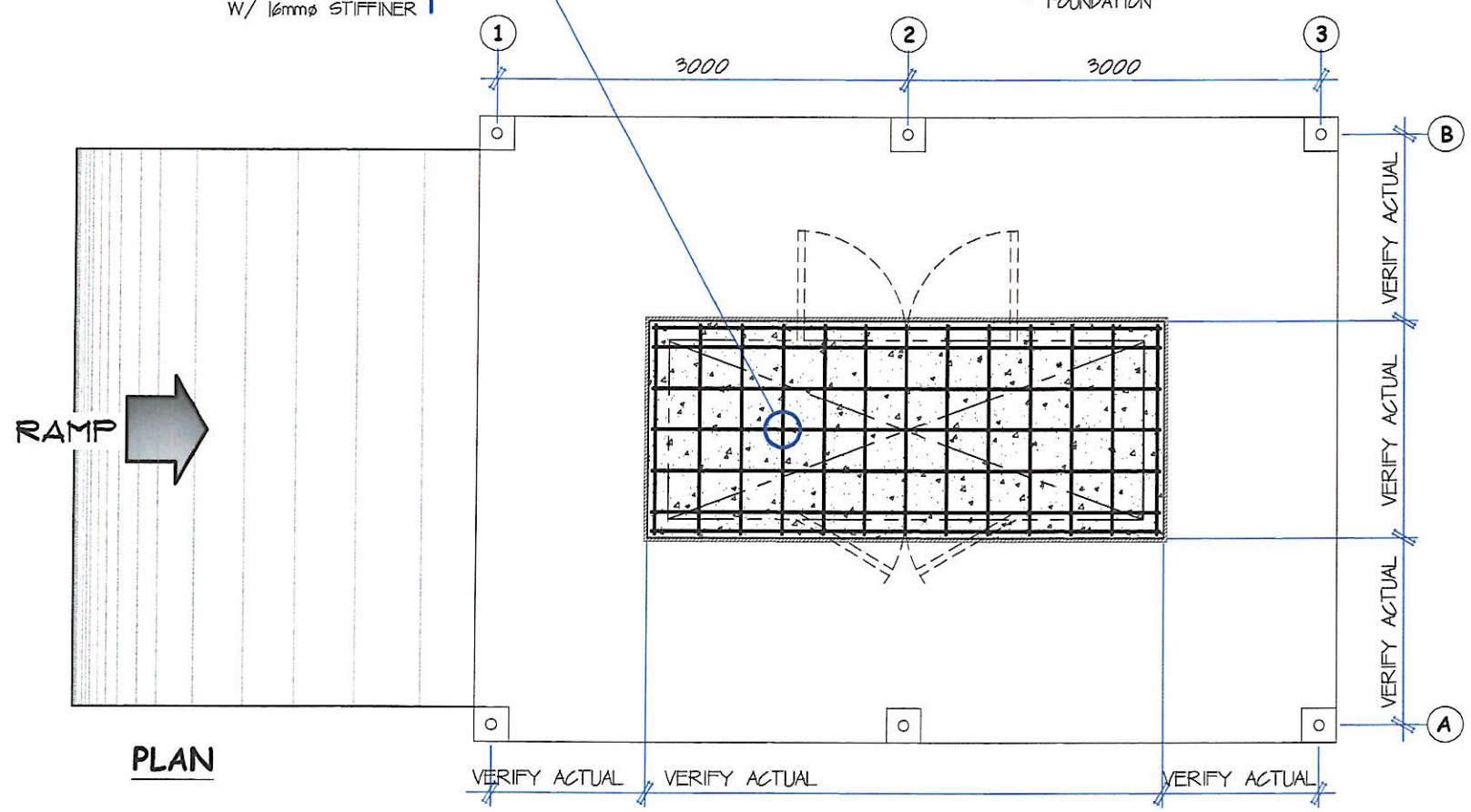

PLAN

01 / M-01 **TYPICAL VIBRATION ISOLATING FOUNDATION** (GENSET SHED)

SCALE : 1 : 50 M

1. The foundation should extend at least 6 inches (150 mm) beyong the skid on all sides. This determines the length (l) and width (w) of the foundation.
2. The foundation should extend at least 6 inches (150 mm) above the floor to make service and maintenance of the generator set easier.
3. The foundation should be reinforced concrete with a 28-day compressive strength of at least 3000 psi (20.68 mPa).

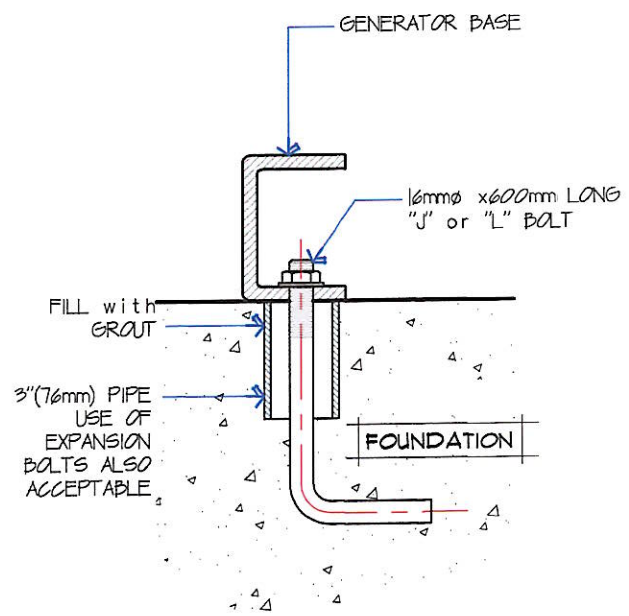

DETAIL OF "J" OR "L" BOLT ANCHORING (GENSET SHED)

02 / M-01 NTS

TECHNICAL SPECIFICATION

ONE(1) SET BRAND NEW SILENT TYPE 250KVA STANDBY POWERED GENERATING SET COMPLETE WITH ACCESSORIES

1. ENGINE
   - Configuration : 4 cycle; in-line; 6 cylinder diesel
   - Aspiration : Turbo charged and after cooled
   - Rated Speed, rpm : 1800
   - Speed droop : 5%
   - Overspeed limit, rpm : 2200±50

2. ALTERNATOR
   - Frequency and Spd : 60Hz/1800rpm
   - Insulation System : Class H/4 POLES
   - Rated Power Factor : 0.8
   - Voltage Regulation : ±5%
   - Full Load Current : >313 Amperes @460V
   - Excitation : SELF EXCITATION
   - Stator Winding : 2/3
   - Exciter Voltage Regulator : Permanent Magnet Generator (PMG)

3. FUEL CONSUMPTION
   - 100% Load : 50 1/hr
   - 75% Load : 38 1/hr
   - 50% Load : 26 1/hr
   - 25% Load : 15 1/hr

4. ELECTRICAL SYSTEM
   - Voltage : 460-480 V
   - Power Factor : 0.8
   - Phase : 3
   - Frequency : 60Hz

5. SOUNDPROOF ENCLOSURE
   It should be Factory Assembled Soundproof Enclosure with 90db.

6. GENERATING SET CONTROL MODULE FEATURES
   Control System comprised of:
   - Protection and control of a diesel engine.
   - Three-phase AC voltage measuring system.
   - Equipped with an LCD display presenting all values amd alarms.
   - Automatic engine start/stop..
   - Engine protection.
   - Breaker control.
   - Generator protection.
   - Digital governing and generator set protective functions.

   Single phase full wave SCR type regulator compatible with either shunt or PMG systems.

6.1 STANDARD FUNCTION
- Engine Control
- Generator Monitoring
- Generator Protection
- Engine Monitoring
- Clear Text Display

6.2 SHUTDOWN FUNCTION
- Loss of Speed Signal
- Alternator Under/Over Voltage
- Alternator Under/Over Frequency
- Mains Under/Over Voltage
- Mains Under/Over Frequency
- Under/Over Speed
- Low Oil Pressure
- High Engine Temperature
- Phase Sequence Electrical (Option)
- Earth Fault (Option)

6.3 WARNING FUNCTION
- Alternator Under/Over Voltage
- Alternator Under/Over Voltage
- Mains Under/Over Voltage
- Mains Under/Over Frequency
- Under/Over Speed
- Low Oil Pressure Pre-alarm
- High Engine Temperature Pre-Alarm
- High/Low Battery Voltage
- Over-current
- Periodic Maintenance

7. GENERATING SET DIMENSION
   L = 3.30M W = 1.07m H = 1.60m

GENERAL SANTOS CITY WATER DISTRICT E. FERNANDEZ STREET, BRGY. LAGAO, GEN. SANTOS CITY ENGINEERING & CONSTRUCTION DEPARTMENT PLANNING AND DESIGN DIVISION TEL. NO.: (083) 552 - 3824	PROFESSIONAL MECHANICAL ENGINEER REG. NO. / TIN. NO. PTR. NO. / DATE :	PROJECT AND LOCATION PROPOSED CONSTRUCTION OF PUMPHOUSE & GENSET SHED LOT 965-G-1, BRGY. MABUHAY, GEN. SANTOS CITY	REVIEWED: ENGR. MARIA CELIA N. DANDAN DEPARTMENT MANAGER, ECD	RECOMMEND APPROVAL: ENGR. ROGELIO A. BESANA, JR. AGM, OTS	APPROVED: FRANCISCO R. ALOLOD, JR., CPA, CESE ACTING GENERAL MANAGER	SHEET CONTENTS AS SHOWN DRAWN BY: Ding-Rae / REV. NO. CHECKED BY: / DATE : Apr 2025	SHEET NO. M-01 10 / 15

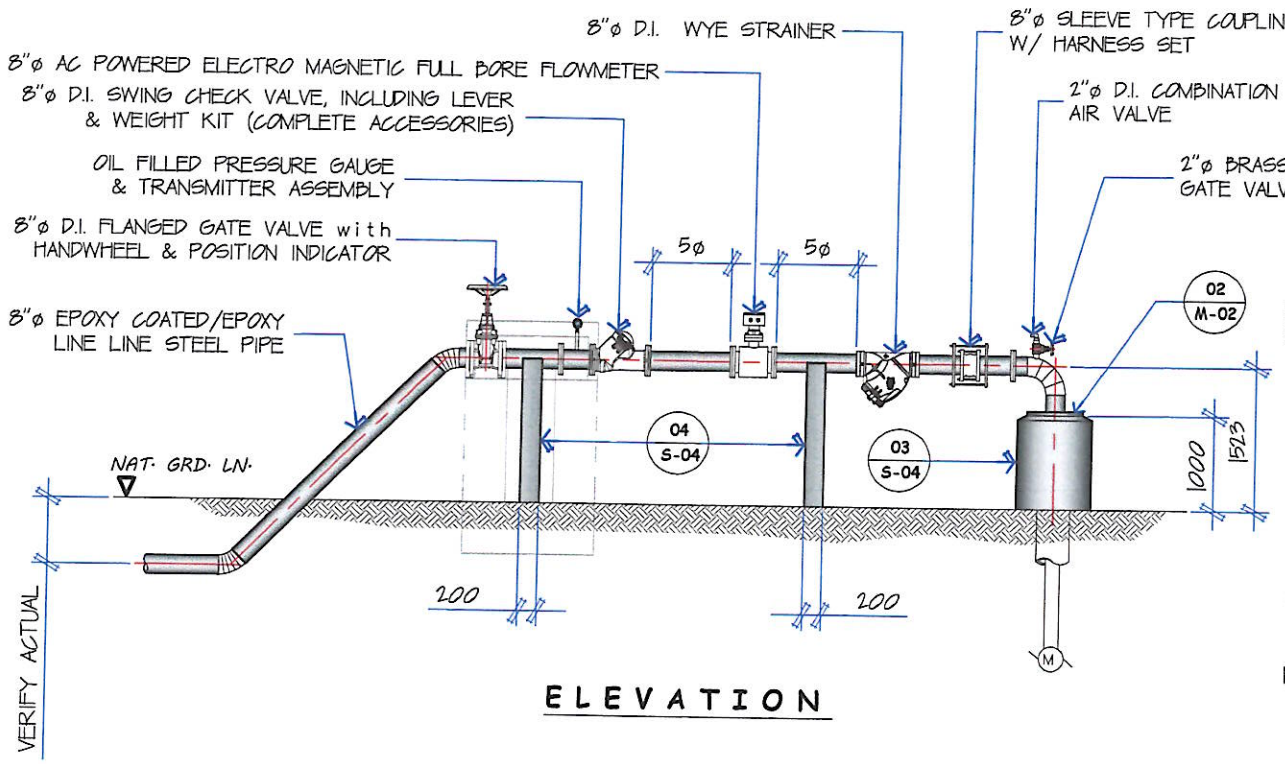

ELEVATION

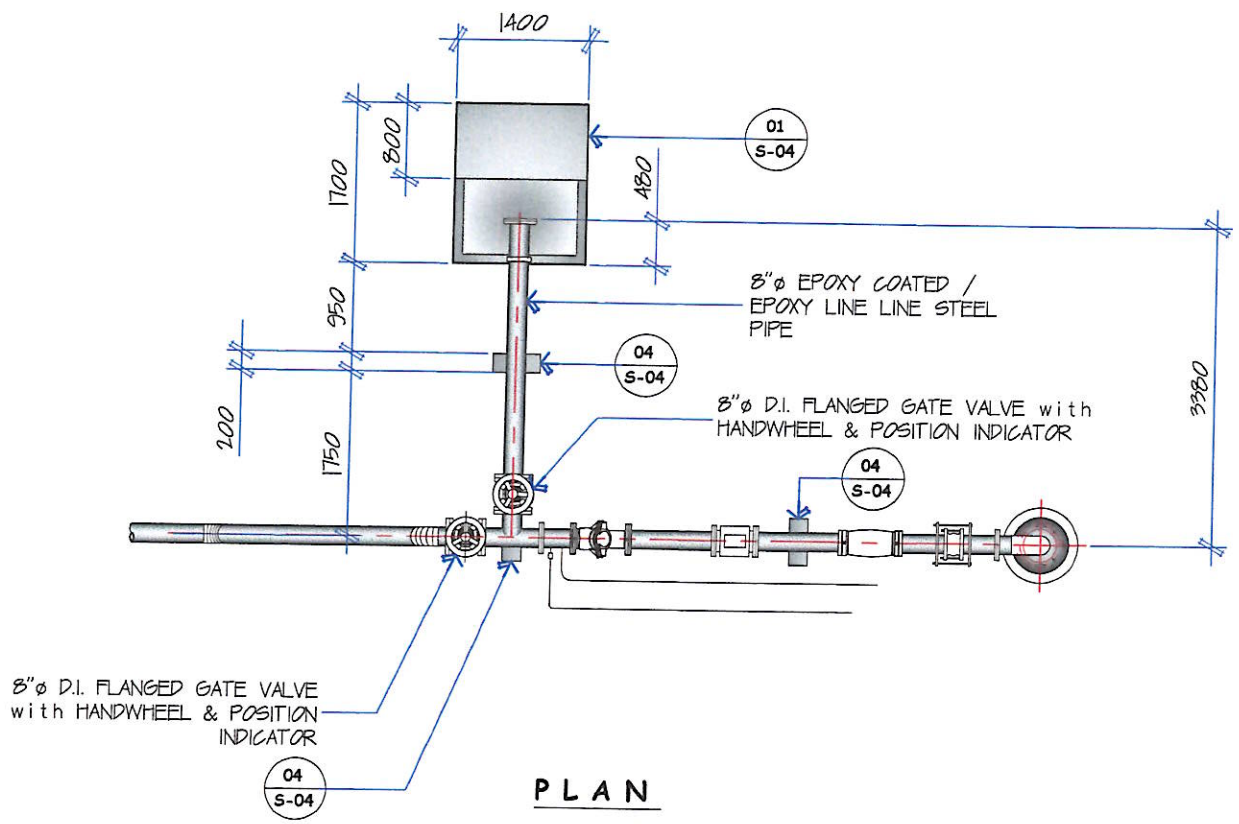

PLAN

01 M-02 DISTRIBUTION PIPELINE DETAIL
NOT TO SCALE

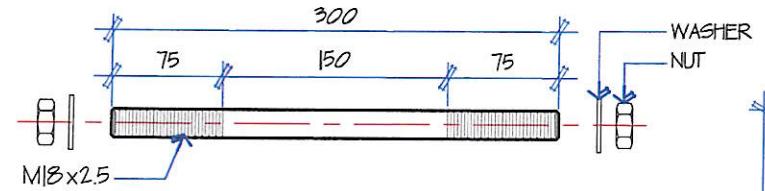

08 M-02 DETAIL OF HARNESS STUD BOLT
SCALE: 1:5 M

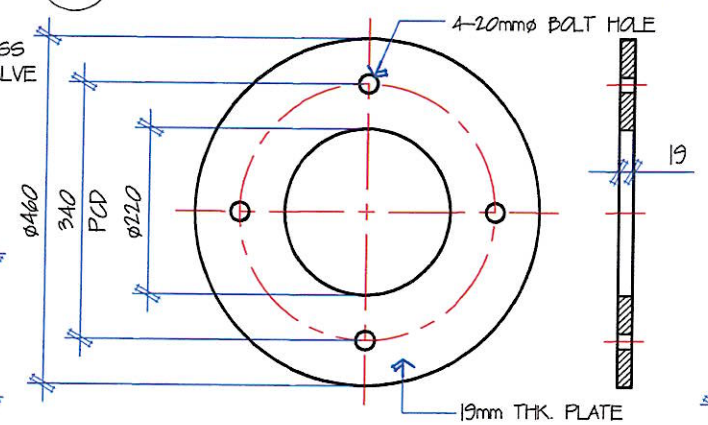

06 M-02 DETAIL OF HARNESS STEEL FLANGE
SCALE: 1:10 M

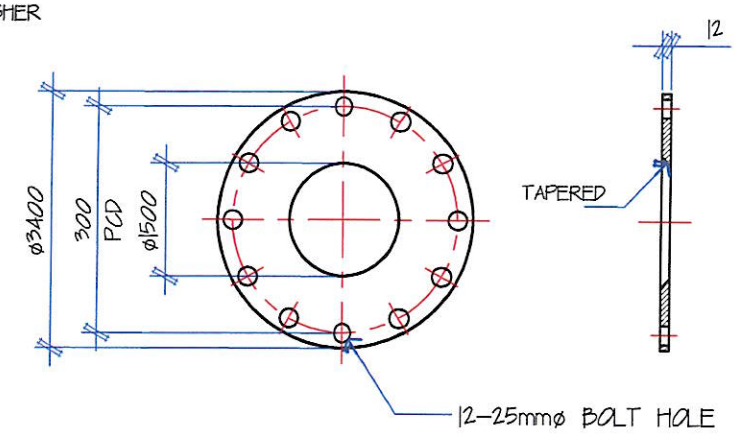

07 M-02 DETAIL OF ORIFICE
SCALE: 1:10 M

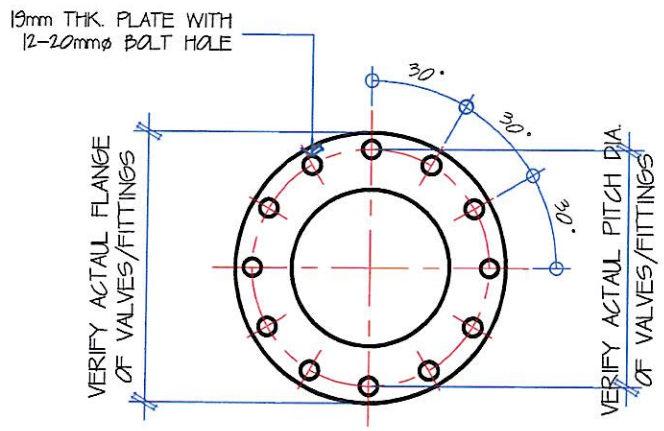

04 M-02 STEEL FLANGE DETAIL
SCALE: NTS

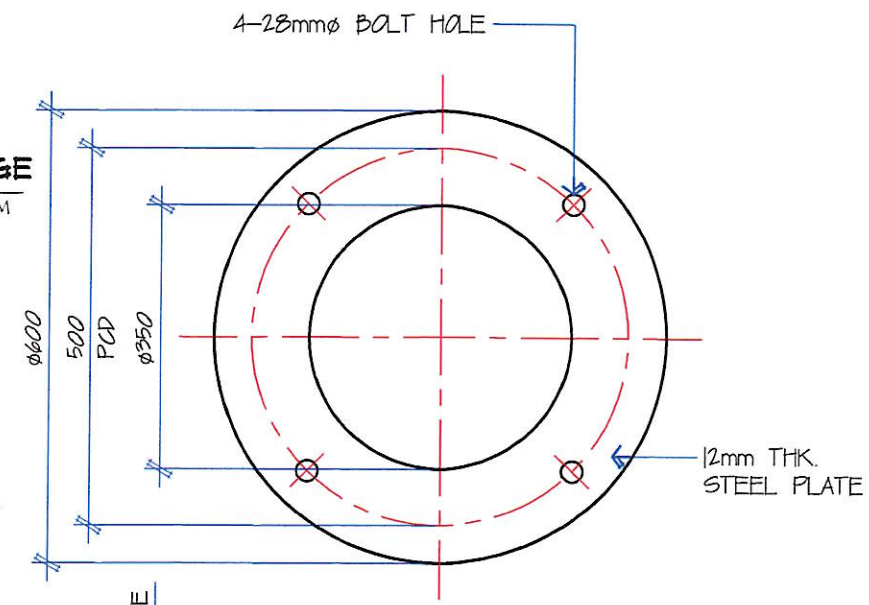

05 M-02 STEEL FLANGE DETAIL
SCALE: 1:10 M

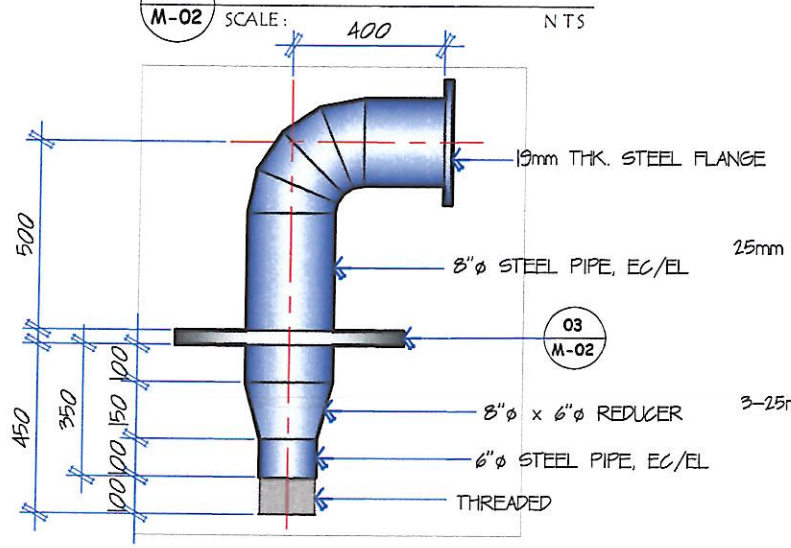

02 M-02 SOLE PLATE ASSEMBLY DETAIL
SCALE: 1:20 M

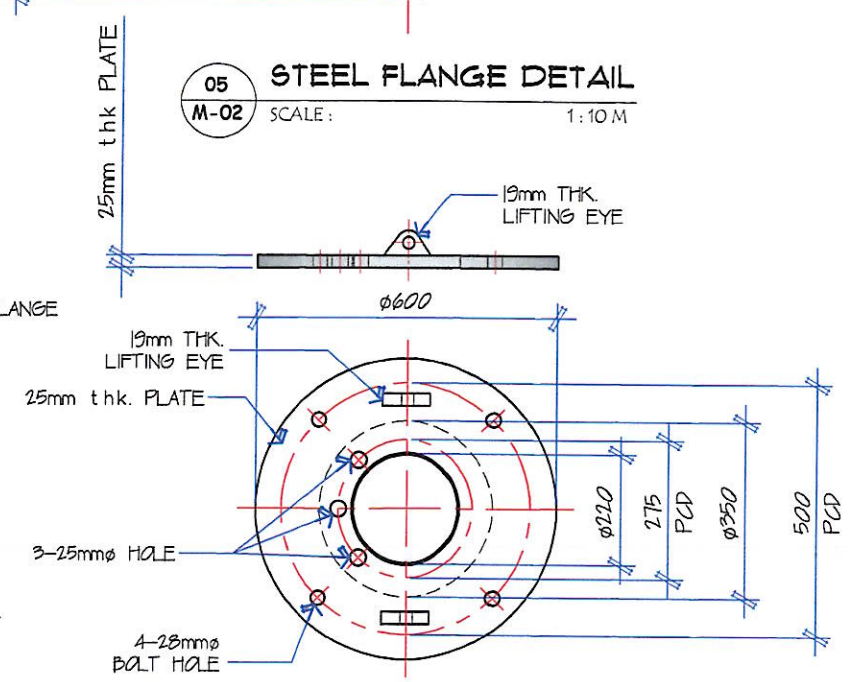

03 M-02 SOLE PLATE DETAIL
SCALE: 1:15 M

GENERAL SANTOS CITY WATER DISTRICT E. FERNANDEZ STREET, BRGY. LAGAO, GEN. SANTOS CITY ENGINEERING & CONSTRUCTION DEPARTMENT PLANNING AND DESIGN DIVISION TEL. NO.: (083) 552 - 3824	PROFESSIONAL MECHANICAL ENGINEER REG. NO. / TIN. NO. PTR. NO. / DATE:	PROJECT AND LOCATION PROPOSED CONSTRUCTION OF PUMPHOUSE & GENSET SHED LOT 965-G-1, BRGY. MABUHAY, GEN. SANTOS CITY	REVIEWED: ENGR. MARIA CELIA N. DANDAN DEPARTMENT MANAGER, ECD	RECOMMEND APPROVAL: ENGR. FOGELIO A. BESANA, JR. AGM, OTS	APPROVED: FRANCISCO R. ALOLOD, JR., CPA, CESE ACTING GENERAL MANAGER	SHEET CONTENTS: AS SHOWN DRAWN BY: Dug-Ree CHECKED BY:	SHEET NO.: M-02 REV. NO.: 11 DATE: Apr 2025	15

RECOMMENDED SUPPORT SPACING FOR COPPER TUBING

TUBE O.D. (mm)	DISTANCE BETWEEN SUPPORT (M)
16	1.89
22–29	2.44
35–54	3.05

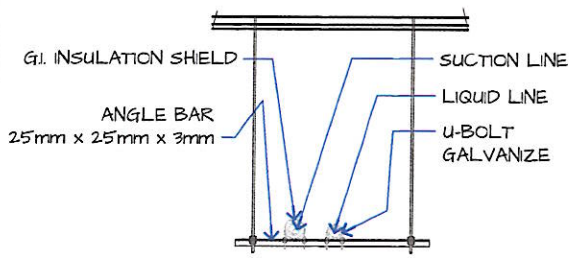

INDOOR

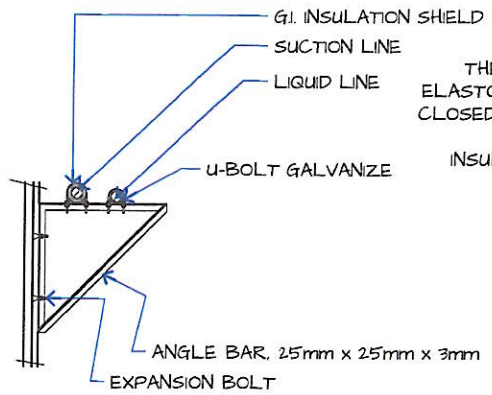

OUTDOOR

02 / M-03 PIPE HANGER DETAIL

NOT TO SCALE

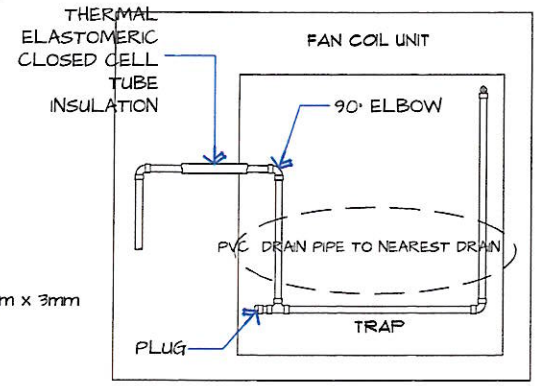

03 / M-03 CONDENSE DRAIN PIPE

NOT TO SCALE

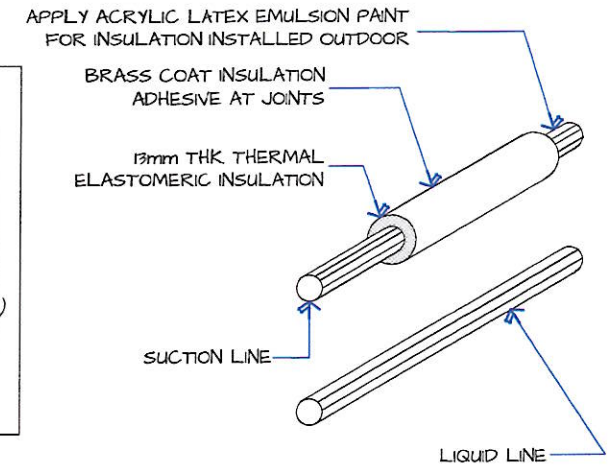

04 / M-03 PIPE INSULATION DETAIL

NOT TO SCALE

NOTE:

1. ADHESIVE & LATEX PAINT SHOULD BE COMPATIBLE WITH THE INSULATION.
2. LIQUID LINE EXPOSED TO DIRECT SUNLIGHT SHALL BE PROVIDED WITH INSULATION.
3. PROVIDE #24 INSULATION SHIELD AT THE POINT OF SUPPORT.

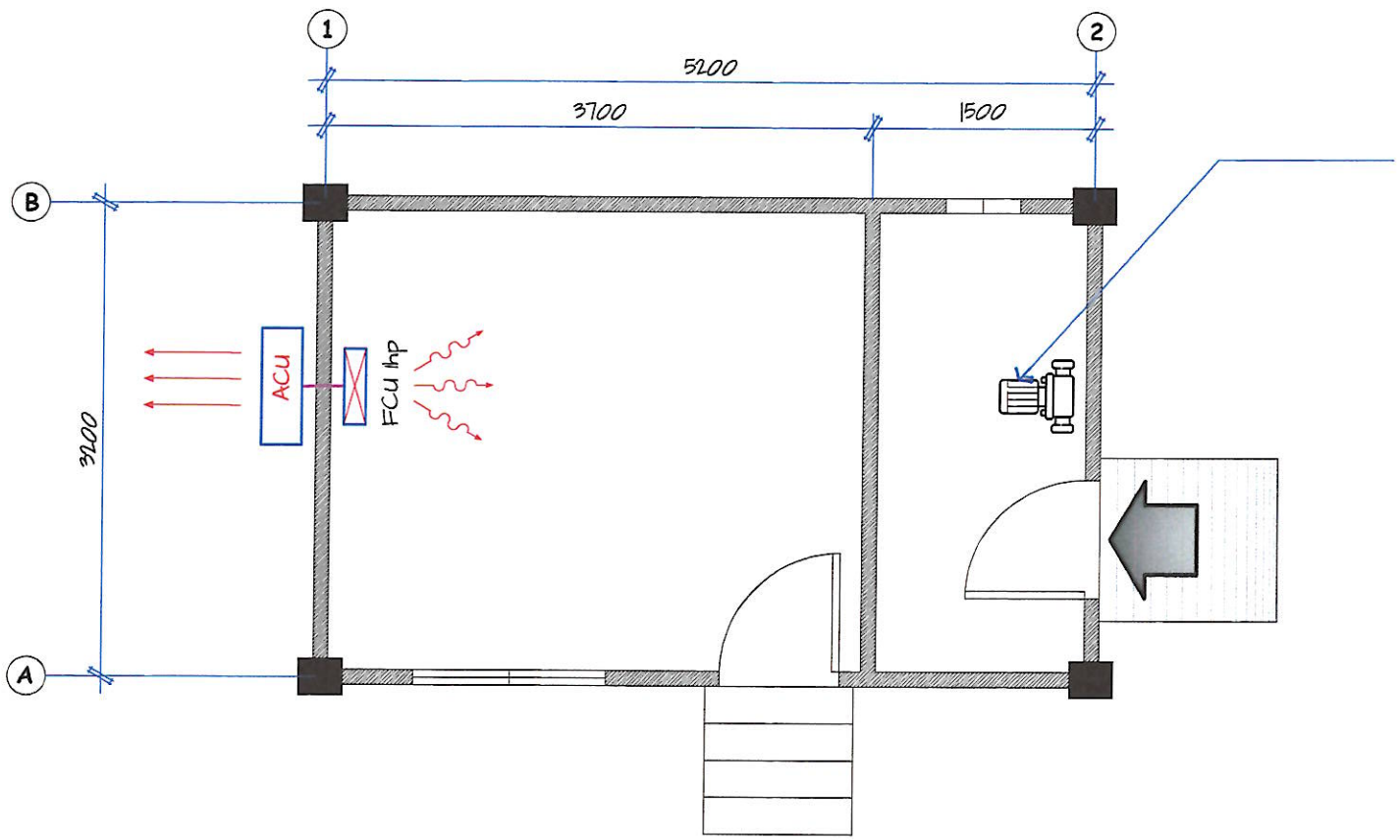

01 / M-03 MECHANICAL EQUIPMENT LOCATION PLAN

SCALE : 1 : 50 M

LEGEND & ABBRE.

FCU ----- FAN COIL UNIT

HP ----- HORSEPOWER

Ø ----- DIAMETER

FCU ----- FAN COIL UNIT WALL MOUNTED with MAGNETIC SWITCH

ACU ----- AIR CONDITIONING UNIT

----- INSULATED REFRIGERANT PIPELINE

MECHANICAL GENERAL NOTES:

1. ALL AIR-CONDITIONING AND VENTILATING UNITS SHALL BE NEW AND THE APPROVED PRODUCTS OF REPUTABLE MANUFACTURERS
2. FAN COIL UNITS SHALL BE SUM MODEL MOUNTED AND MUST BE PROVIDED WITH BLUE PVC DRAIN PIPE.
3. REFRIGERANT SUCTION LINES SHALL BE INSULATED WITH 13MM THK. ELASTOMERIC PRE-MOLDED RUBBER INSULATION.
4. IT SHALL BE THE RESPONSIBILITY OF THE CONTRACTOR TO COORDINATE HIS WORK WITH THE OTHER TRADES CONCERNED AND WITH THE OTHER PROJECT ENGINEER.
5. THE WORKS THROUGHOUT SHALL BE EXECUTED IN THE MOST THROUGH MANNER KNOWN TO THE TRADE AND TO THE SATISFACTION OF THE ARCHITECT/ENGINEER.
6. PROVIDE PROPER FOUNDATION FOR THE MOUNTING OF EQUIPMENT FOUNDATION FOR THE FCU SHALL BE AT LEAST 100MM FROM FINISHED FLOOR LINE.
7. ALL AIR-CONDITIONING UNITS SHALL BE PROVIDED WITH THE AUTOMATIC MOTOR PROTECTOR TO BE INSTALLED BESIDE THE ACCU.
8. REFRIGERANT PIPES FOR SPLIT TYPE AIR-CON SHALL BE CLAD WITH A 4"Ø PVC PIPE PRIOR TO BEING EMBEDDED.
9. ALL REFRIGERANT PIPES SHALL BE LOCATED AT THE REAR OF THE FCU'S AND NOT ON THE USUAL SIDE LOCATION.
10. HANGER/SUPPORT MUST BE PAINTED WITH DOUBLE COAT OF RUST PROTECTIVE PAINT.
11. VERIFY ALL DIMENSIONAL LOCATION OF EQUIPMENT ON THE DRAWINGS OF RELATED TRADES AND INVESTIGATE ALL POSSIBLE INTERFERENCE AND CONDITION AFFECTING THE MECHANICAL WORK.
12. UPON THE COMPLETION OF THE A/C EQUIPMENT INSTALLATION, TEST ALL FACTORY AND FIELD INSTALLED REFRIGERANT PIPING WITH A LEAK DETECTOR TO ACQUIRE A LEAK-TIGHT CORRECT AND RE-TEST THE SYSTEM FOLLOWING THE MANUFACTURER'S RECOMMENDATIONS.
13. THE CONTRACTOR SHALL SUBMIT MANUFACTURER'S WARRANTY CERTIFICATE UPON THE COMPLETION OF THE PROJECT.

GENERAL SANTOS CITY WATER DISTRICT E. FERNANDEZ STREET, BRGY. LAGAO, GEN. SANTOS CITY ENGINEERING & CONSTRUCTION DEPARTMENT PLANNING AND DESIGN DIVISION TEL. NO.: (083) 552 - 3824	PROFESSIONAL MECHANICAL ENGINEER REG. NO. / TIN. NO. PTR. NO. / DATE :	PROJECT AND LOCATION PROPOSED CONSTRUCTION OF PUMPHOUSE & GENSET SHED LOT 965-G-1, BRGY. MABUHAY, GEN. SANTOS CITY	REVIEWED: ENGR. MARIA CELIA N. DANDAN DEPARTMENT MANAGER, ECD	RECOMMEND APPROVAL: ENGR. ROGELIO A. BESANA, JR. AGM, OTS	APPROVED: FRANCISCO F. ALOLOD, JR., CPA, CESE ACTING GENERAL MANAGER	SHEET CONTENTS AS SHOWN DRAWN BY: Dug-Rae CHECKED BY:	SHEET NO. M-03 REV. NO. DATE : Apr 2025	12	15

PLUMBING NOTES:

1. GRADES OF HORIZONTAL PIPING
   RUN ALL HORIZONTAL PIPINGS IN PERFECT ALIGNMENT AND AT A FORM GRADE OF NOT LESS THAN TWO PERCENT (2%)

2. CHANGE IN DIRECTION
   ALL CHANGE IN DIRECTION SHALL BE MADE BY APPROPRIATE USE OF FORTY FIVE DEGREES (45°) WYES. LONG SWEEP QUARTER BEND, SIX-EIGHT OR SIXTEENTH BENDS. WHEN THE CHANGE OF FLOW IS FROM HORIZONTAL TO VERTICAL, 1/8 BEND COMBINATION MAYBE USED ON VERTICAL STACKS AND SHORT QUARTER BENDS MAYBE USED ON WASTE LINE. TEE AND CROSSES MAYBE USED IN VENT PIPES.

3. PROHIBITED FITTINGS
   NO DOUBLE HUB OR TEE BRANCH SHALL BE USED ON HORIZONTAL WASTE LINES. THE DRILLINGS AND TAPPINGS OF HOUSE DRAIN, WASTE OR VENT PIPES AND USE OF SADDLE HUB AND BEND ARE PROHIBITED.

4. SLEEVES
   PROVIDE PIPE SLEEVES AT WALLS, COLUMNS OR SLABS ONE SIZE BIGGER THAN THE ACTUAL SIZE PASSING THROUGH THE WALLS, COLUMNS OR UNDER SLAB TO PROTECT PIPE FROM LEAKAGE.

5. PIPE CLEAN-OUTS
   PIPE CLEAN-OUTS ARE REQUIRED UNDER THE FOLLOWING CONDITIONS:

a. EVERY CHANGE IN HORIZONTAL DIRECTIONS EXCEEDING TWENTY-TWO AND ONE-HALF DEGREES (22 ½°).
b. ONE AND ONE-HALF METERS (1.50 m) INSIDE THE PROPERTY LINE BEFORE THE HOUSE DRAINAGE CONNECTION.
c. EVERY FIFTEEN METERS (15.00 m) IN HORIZONTAL RUN OF PIPES.
d. AT THE END OF ANY HORIZONTAL PIPE LINES.

6. ALL PLUMBING WORKS SHALL BE DONE BY A LICENSED MASTER PLUMBER AND A LICENSED PLUMBING CONTRACTOR.

SPECIFICATIONS:

ALL PLUMBING WORKS AND INSTALLATION SHALL CONFORM WITH THE LATEST EDITION OF NATIONAL PLUMBING CODE RULES RULES AND REGULATION OF THE ENFORCING AUTHORITY CONCERNED AND CITY

ALL HORIZONTAL PIPINGS SHALL RUN IN PRACTICAL ALIGNMENT AND SHALL BE PROVIDED WITH SLOPE OF NOT LESS THAN 1% SLOPE AND SUPPORTED OF ANCHORED EVERY 3.00m INTERVALS

ALL MATERIALS SHALL BE NEW AND APPROVED TYPES:
a. FOR SANITARY LINES:
   2"ø PVC PIPES FOR VENTS AND FIXTURES
   4"ø PVC PIPES FOR WC, FD, CO.

b. FOR WATER LINES:
   ½"ø G.I. PIPE FOR FIXTURES
   ¾"ø G.I. PIPE FOR BRANCHES
   1"ø G.I. PIPE FOR MAINLINE SUPPLY

ALL PLUMBING WORKS AND INSTALLATION SHALL BE STRICTLY SUPERVISED BY A DULY REGISTERED MASTER PLUMBER

PLUMBING LEGEND:

CB	CATCH BASIN
PVCDP	POLYVINYL CHLORIDE DRAINAGE PIPE
PVCDS	POLYVINYL CHLORIDE DOWNSPOUT

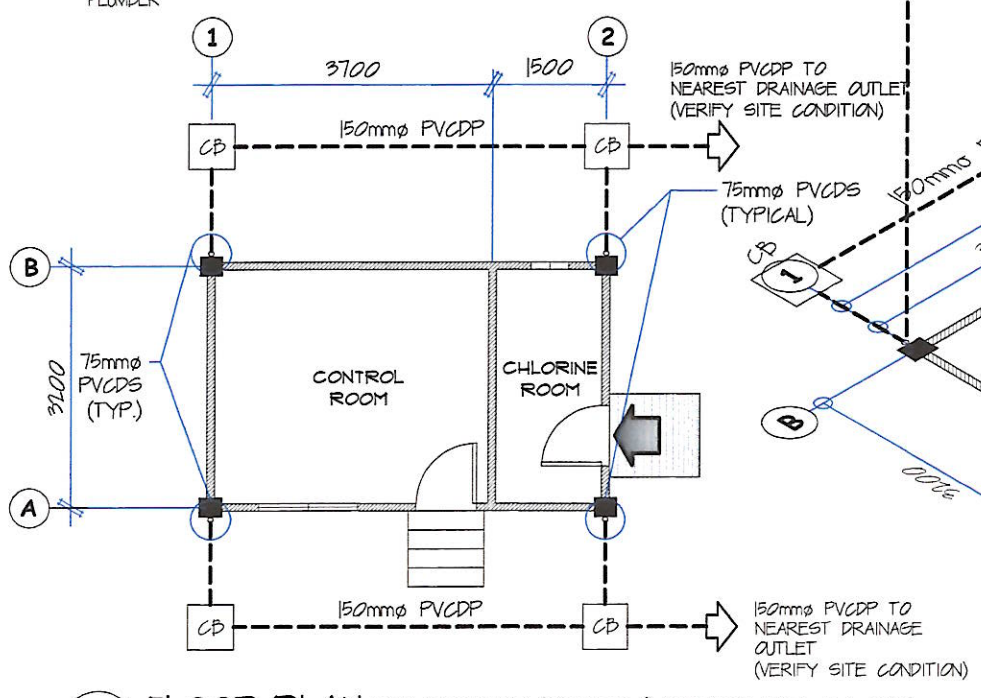

01 P-01 FLOOR PLAN PUMPHOUSE (SEWER & DRAINAGE LAY-OUT)
SCALE: 1 : 100 M

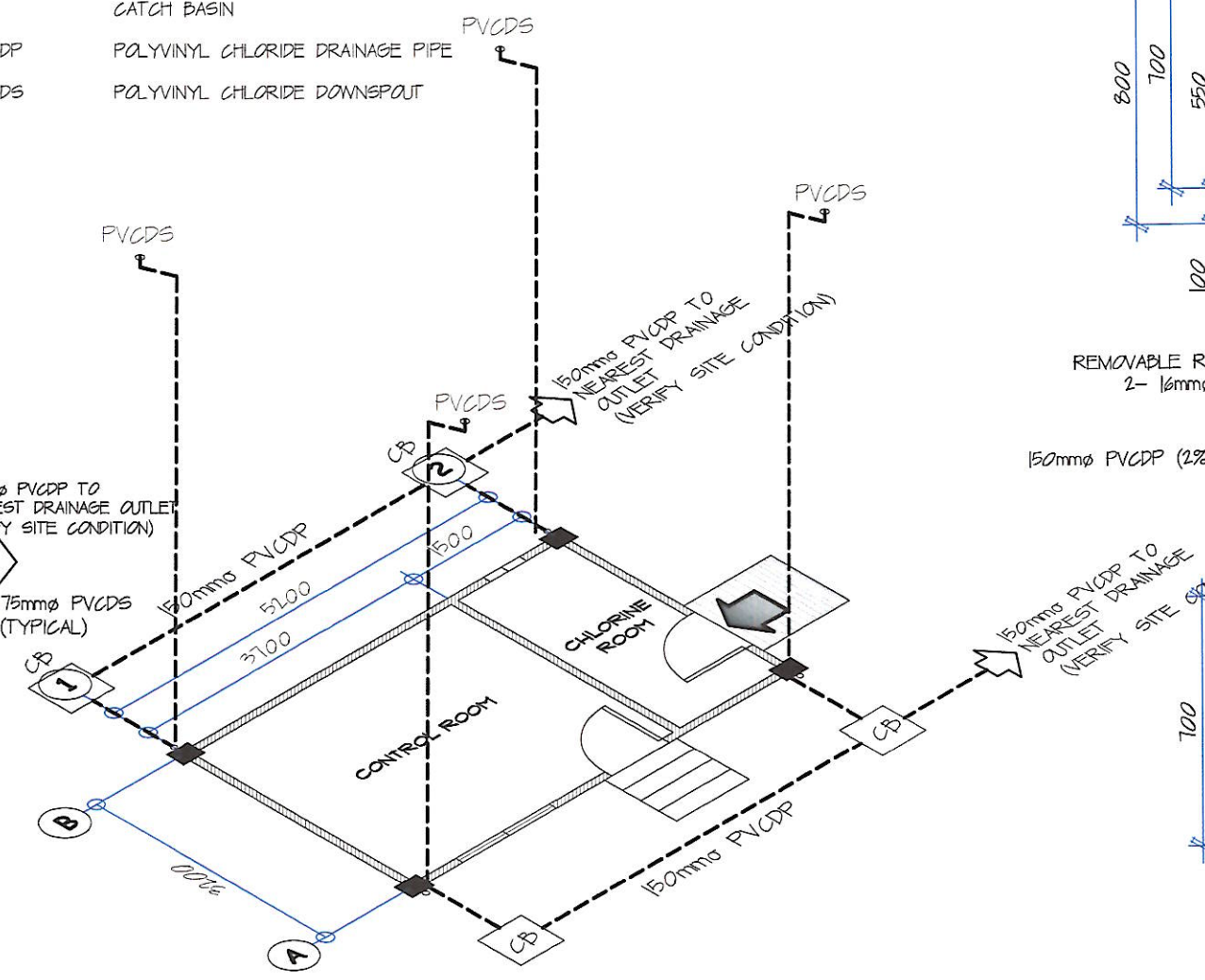

02 P-01 ISOMETRIC PUMPHOUSE (SEWER & DRAINAGE LAY-OUT)
SCALE: NTS

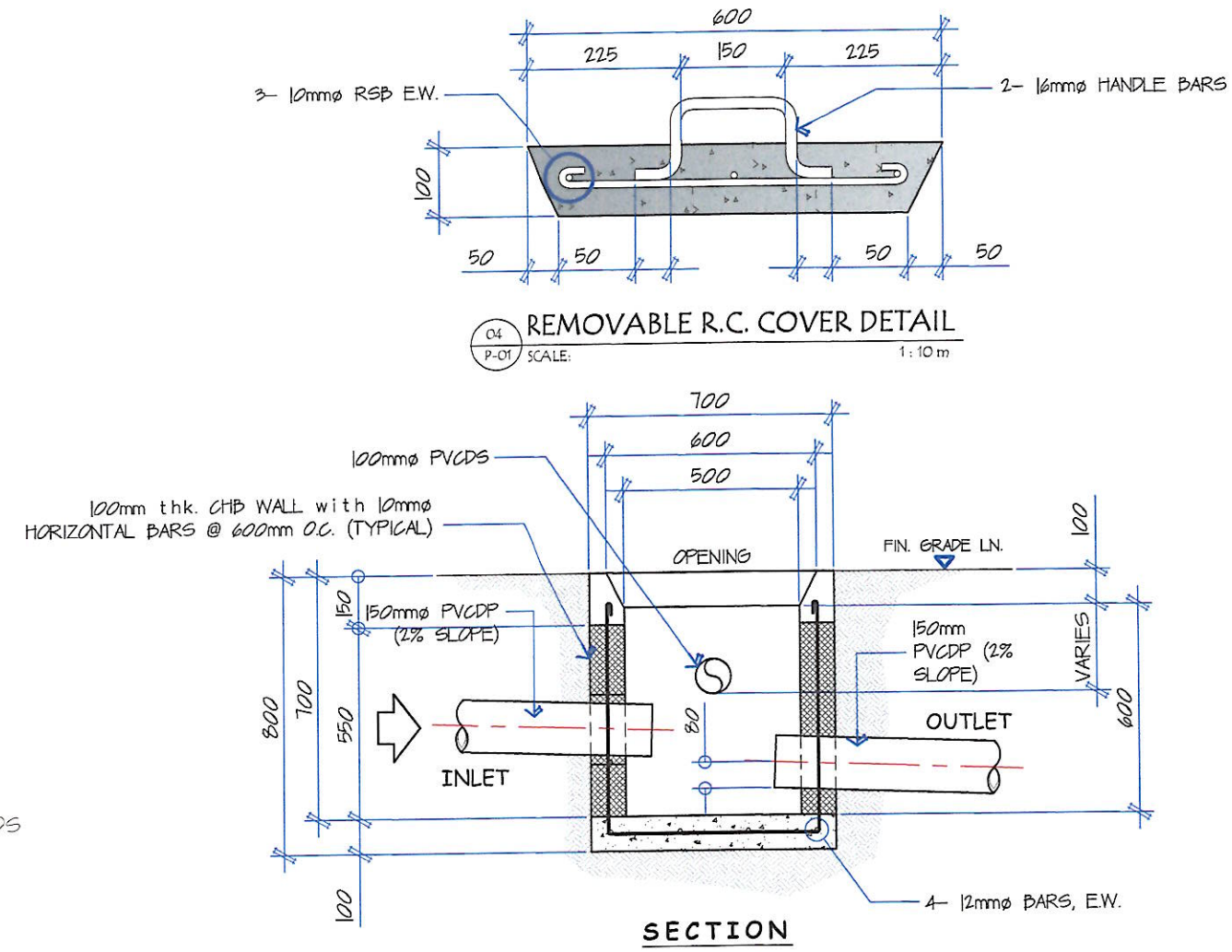

SECTION

04 P-01 REMOVABLE R.C. COVER DETAIL
SCALE: 1 : 10 m

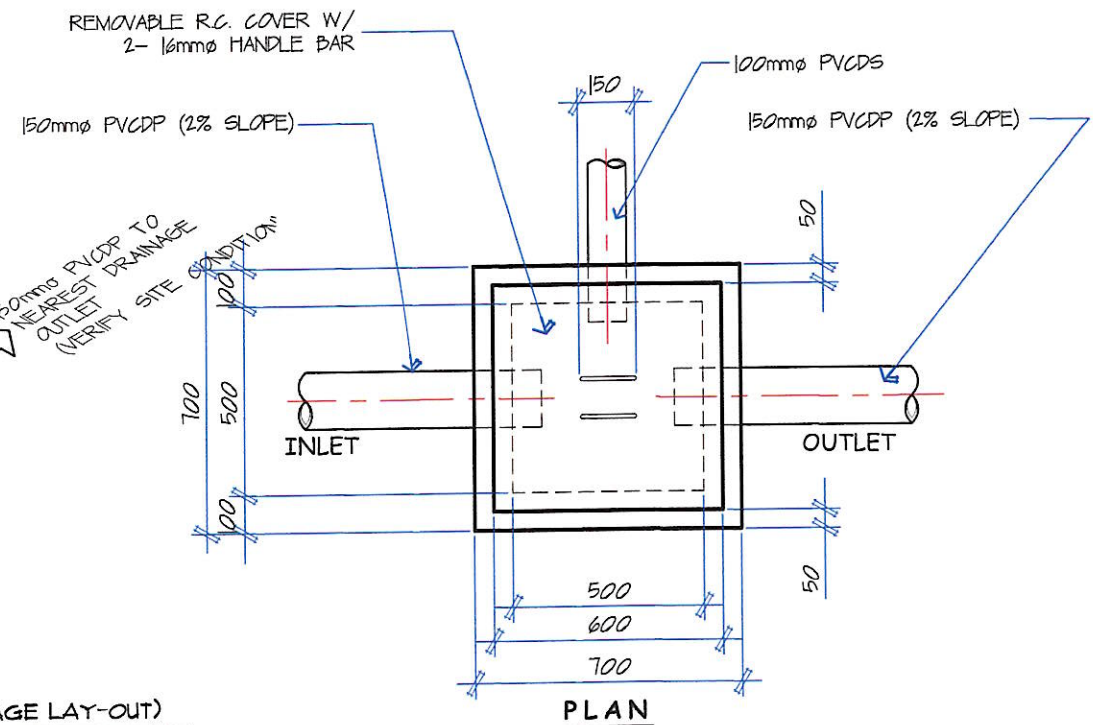

PLAN

03 P-01 DETAIL OF CATCH BASIN (PUMPHOUSE)
SCALE: 1 : 20 M

GENERAL SANTOS CITY WATER DISTRICT E. FERNANDEZ STREET, BRGY. LAGAO, GEN. SANTOS CITY ENGINEERING & CONSTRUCTION DEPARTMENT PLANNING AND DESIGN DIVISION TEL. NO.: (083) 552 - 3824	ENGR. MIGUEL M. DINAPO, JR. REGISTERED MASTER PLUMBER REG. NO. 0015212 / TIN. NO. 927-963867 PTR. NO. 1539181A / DATE: 01/09/2025	PROJECT AND LOCATION PROPOSED CONSTRUCTION OF PUMPHOUSE & GENSET SHED LOT 965-G-1, BRGY. MABUHAY, GEN. SANTOS CITY	REVIEWED: ENGR. MARIA CELIA N. DANDAN DEPARTMENT MANAGER, ECD	RECOMMEND APPROVAL: ENGR. ROGELIO A. BESANA, JR. AGM, OTS	APPROVED: FRANCISCO R. ALOLOD, JR., CPA, CESE ACTING GENERAL MANAGER	SHEET CONTENTS AS SHOWN DRAWN BY: Dug-Ree / REV. NO. CHECKED BY: / DATE: Apr 2025	SHEET NO. P-01 13 / 15

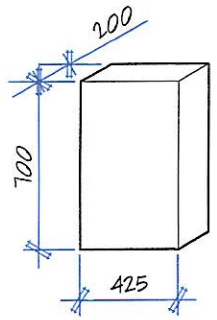

03 E-01 MCB
NOT TO SCALE

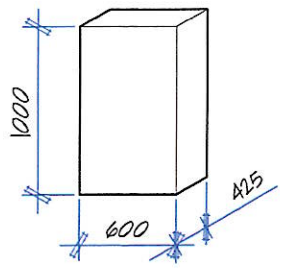

04 E-01 ATS
NOT TO SCALE

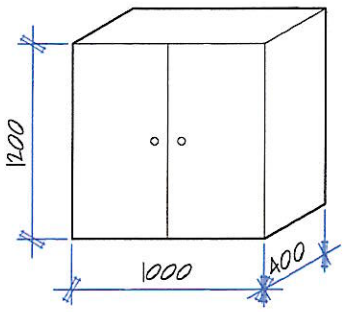

05 E-01 MCP
NOT TO SCALE

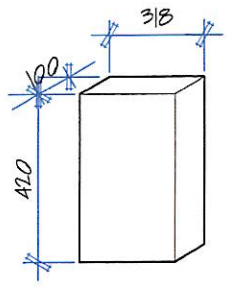

06 E-01 220V DISTRIBUTION PANEL
NOT TO SCALE

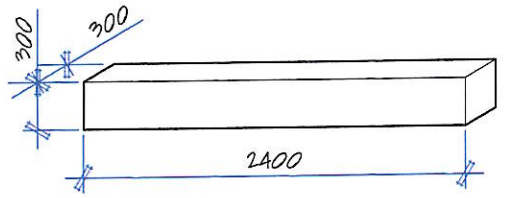

07 E-01 ELECTRICAL GUTTER
NOT TO SCALE

USE : 2mm Thick Pre-Painted
G.I. Plain Sheet

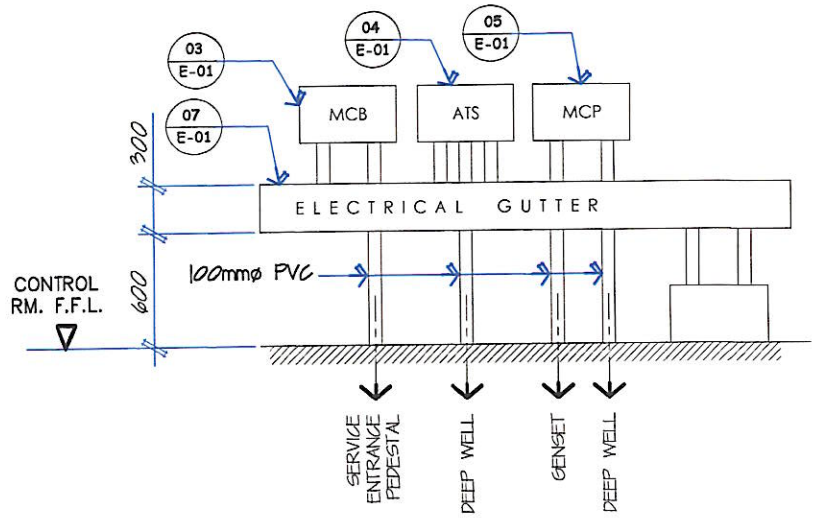

08 E-01 ELEVATION
NOT TO SCALE

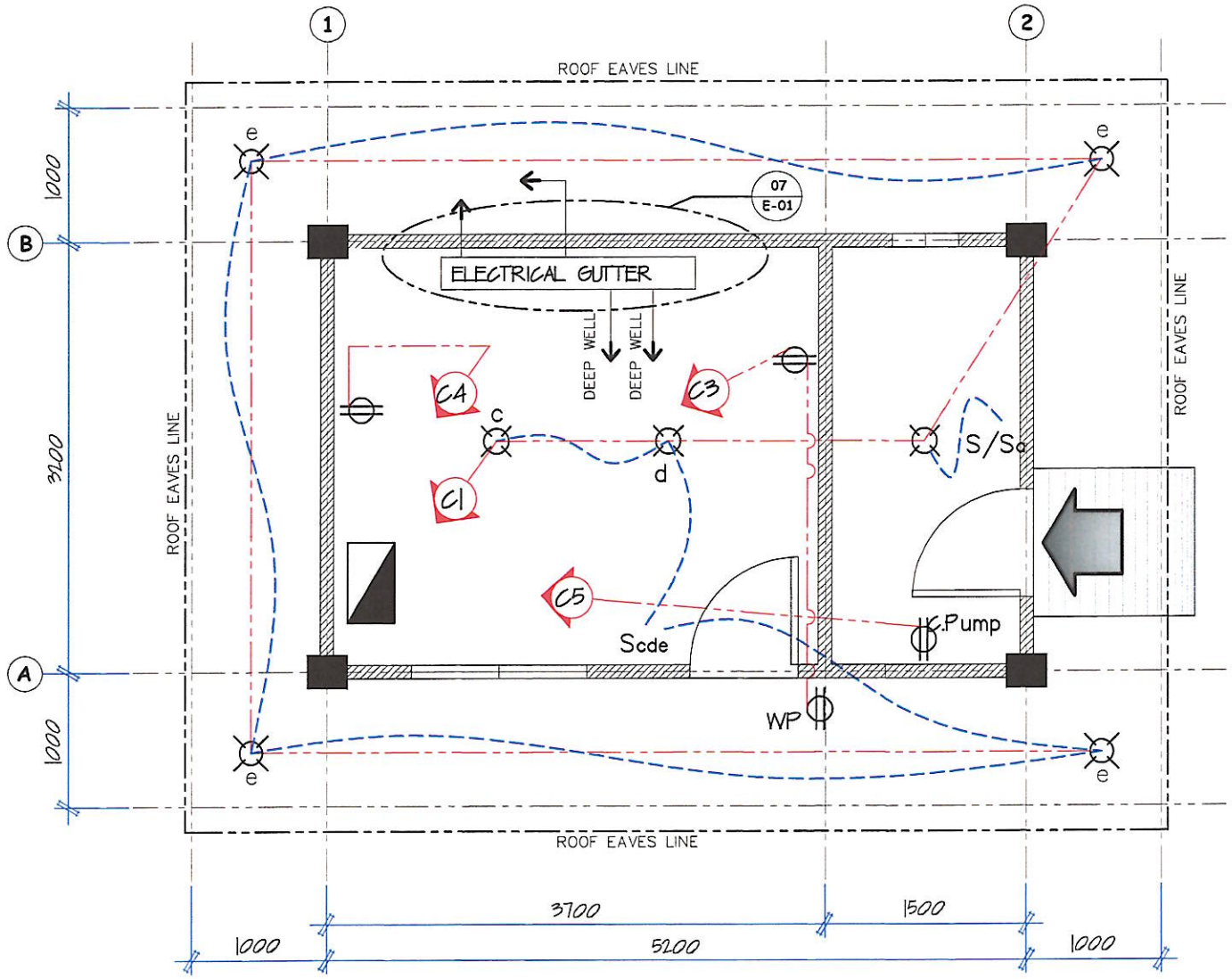

01 E-01 ELECTRICAL LAYOUT (PUMPHOUSE)
SCALE: 1 : 50 M

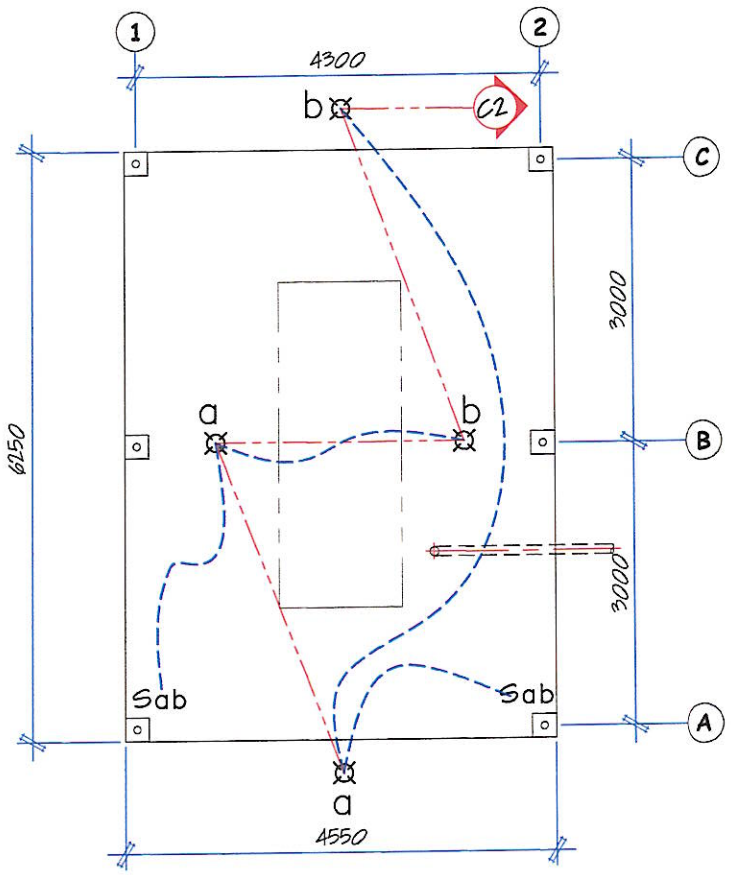

02 E-01 ELECTRICAL LAYOUT (GENSET SHED)
SCALE: 1 : 80 M

LEGEND:

- 200W SOLAR STREET LIGHT OUTDOOR LED LIGHT OUTLET
- CEILING LIGHT OUTLET
- DUPLEX CONVENIENCE OUTLET, GROUNDING TYPE 10 AMPS, 250 VOLT W/ MODERN PLATE COVER
- WP — DUPLEX WEATHERPROOF CONVENIENCE OUTLET
- PANEL BOARD
- MCP — MOTOR CONTROL PANEL
- M — KILOWATT HOUR METER
- S/Sa — ONE GANG DEVICE SWITCH
- Sab — TWO GANG DEVICE SWITCH
- Scde — THREE GANG DEVICE SWITCH
- HOMERUN DIRECT TO PANEL BOARD
- RACEWAY CONDUIT CONCEALED IN CEILING
- **CIRCUIT RUN**
- M — SUBMERSIBLE PUMP MOTOR
- DOUBLE THROW
- GROUNDING SYSTEM
- ELECTRIC SERVICE ENTRANCE
- M — 1hp CHLORINE BOOSTER PUMP

GENERAL SANTOS CITY WATER DISTRICT E. FERNANDEZ STREET, BRGY. LAGAO, GEN. SANTOS CITY ENGINEERING & CONSTRUCTION DEPARTMENT PLANNING AND DESIGN DIVISION TEL. NO.: (083) 552 - 3824	PROFESSIONAL ELECTRICAL ENGINEER REG. NO. / TIN. NO. PTR. NO. / DATE :	PROJECT AND LOCATION PROPOSED CONSTRUCTION OF PUMPHOUSE & GENSET SHED LOT 965-G-1, BRGY. MABUHAY, GEN. SANTOS CITY	REVIEWED: ENGR. MARIA CELIA N. DANDAN DEPARTMENT MANAGER, ECD	RECOMMEND APPROVAL: ENGR. ROGELIO A. BESANA, JR. AGM, OTS	APPROVED: FRANCISCO R. ALOLOD, JR., CPA, CESE ACTING GENERAL MANAGER	SHEET CONTENTS AS SHOWN DRAWN BY: Dug-Rae / REV. NO. CHECKED BY: / DATE: Apr 2025	SHEET NO. E-01 14 / 15

SCHEDULE OF LOADS:

PANEL:	LP	VOLTAGE:	220
FEED:	TOP	PHASE:	1
MOUNTING:	SURFACE	WIRE:	2

CIRCUIT NO.	PARTICULARS	NO. OF OUTLET	WATTS	PHASE	VOLTS	AMPERE	CB RATING	WIRE SIZE AND CONDUIT
1	Lighting Outlet, LED Lamp	7	700	1	230	3.04	15 AT	2-3.5mm² THWN, 1-2.0mm² TW(GND.) IN 15mmø CONDUIT
2	Lighting Outlet, LED Lamp	4	400	1	230	1.74	15 AT	2-3.5mm² THWN, 1-2.0mm² TW(GND.) IN 15mmø CONDUIT
3	Convenience Outlet	2	1,000	1	230	4.35	20 AT	2-5.5mm² THWN, 1-2.0mm² TW(GND.) IN 15mmø CONDUIT
4	ACU, 1 hp Split Type(Magnetic Switch w/ Built-in 3-Prong Outlet	1	1,840	1	230	8.00	20 AT	2-5.5mm² THWN, 1-2.0mm² TW(GND.) IN 15mmø CONDUIT
5	1 HP Chlorinator pump	1	1,840	1	230	8.00	30 AT	2-5.5mm² THWN, 1-2.0mm² TW(GND.) IN 15mmø CONDUIT
6	SPARE	1	2,000	1	230	8.70	15 AT	2-3.5mm² THWN, 1-2.0mm² TW(GND.) IN 15mmø CONDUIT
	TOTAL		7,780					

COMPUTATION: @ 80 % Demand Factor

Demand load = 7,780/ 230 x 0.8DF = 27.06 A

COMPUTATION FOR MINIMUM STEP DOWN TRANSFORMER 460V/230V:

= 27.06 x 1.25 = 33.83 AMPS

KVA = 33.83 x 230 / 1000

KVA = 7.78

USED : 10 KVA, 460V PRI./230V SECONDARY DRY TYPE STEP DOWN TRANSFORMER

FEEDER : 2 – 14mmø THWN wire, 1 – 3.5mm TW (GND) in 20mmØ CONDUIT

MAIN : 50AT, 100AF, 2P, 230V

PANEL:	MCP	VOLTAGE:	460
FEED:	TOP	PHASE:	3
MOUNTING:	SURFACE	WIRE:	3

CKT NO.	PARTICULARS	NO. OF OUTLET	WATTS	PHASE	VOLTS	AMPERE AB	AMPERE BC	AMPERE CA	AMPERE 3Ø	CB RATING	WIRE SIZE AND CONDUIT
1	125 HP Submersible Motor	1	106,000	3	460					250 AT	3-100mm² THWN, IN 1-22mm² TW(GND) IN 100mmø CONDUIT
2	LP 10 KVA Dry Type X'mer	1	7,780	1	460			16.91		40 AT	2-5.5mm² THWN, IN 1-2.0mm² TW(GND) IN 15mmø CONDUIT
	TOTAL		113,780					16.91			

COMPUTATION :

I = 125 x 113,780 / 1.73 x 460 x 0.80

I = 223.4 AMPS

KVA = (113,780)(1.25)/0.80

= 177,781.25 / 1000

= 177.78

USE : 3 – 75 KVA, 13.2KV/460V TRANSFORMER BANK
POLE MOUNTED TRANSFORMER

MOUNTING HEIGHTS:

CONVENIENCE OUTLETS : 300mm FROM BOTTOM OF OUTLET TO FINISH FLOOR LEVEL.
WALL SWITCHES : 1,370mm FROM BOTTOM OF SWITCH TO FINISH FLOOR LEVEL.
PANEL BOARD : 1,830mm TOP OF PANEL TO FINISH FLOOR LEVEL.
KILOWATT HOUR METER : 1,830mm FROM CENTER OF DEVICES TO FINISH GRADE LEVEL.

GENERAL NOTES:

1. ALL ELECTRICAL WORKS SHALL BE DONE IN ACCORDANCE WITH THE PROVISION OF THE LATEST EDITION OF THE PHILIPPINE ELECTRICAL CODE, EXISTING APPLICABLE ORDINANCES, RULES AND REGULATIONS OF THE LOCAL GOVERNMENT AND WITH THE REQUIREMENTS OF THE LOCAL POWER COMPANY.
2. THE TYPE OF SERVICE POWER SUPPLY TO BE USED SHALL BE SINGLE-PHASE, 2-WIRE, 230V, 60 HERTZ, A.C
3. THE CONTRACTOR SHALL VERIFY AND ORIENT THE ACTUAL LOCATION OF SERVICE ENTRANCE FOR CONNECTION TO THE POWER COMPANY SERVICE POINT.
4. UNLESS OTHERWISE SPECIFIED, THE MINIMUM SIZES OF WIRE AND ELECTRICAL PVC PIPE TO BE USED SHALL BE 3.5mm²,THHN AND 15mm NOMINAL DIAMETER, RESPECTIVELY. LIKEWISE ALL ELECTRICAL WIRES SHALL BE COLOR-CODED.
5. ALL LIGHTING CIRCUIT HOME RUNS AND CONVENIENCE OUTLETS SHALL BE WIRED WITH NOT LESS THAN 3.5 mm² IN SIZE.
6. WHEREVER REQUIRED AND NECESSARY, PULL OR JUNCTION BOXES SHALL BE INSTALLED AT CONVENIENT AND INCONSPICUOUS LOCATION, ALTHOUGH SUCH BOXES ARE NOT SHOWN ON THE PLAN NOR MENTIONED IN THE SPECIFICATIONS.
7. ALL NON-CURRENT CARRYING METAL PARTS OF ELECTRICAL EQUIPMENT SHALL BE PROPERLY GROUNDED IN ACCORDANCE WITH THE PROVISIONS OF THE LATEST EDITION OF THE PHILIPPINE ELECTRICAL CODE.
8. ALL MATERIALS TO BE USED SHALL BE BRAND NEW AND OF THE APPROVED TYPE FOR LOCATION AND PURPOSE.
10. ALL WALL OUTLETS SHALL BE INSTALLED AT THE FOLLOWING HEIGHTS ABOVE THE FINISHED FLOOR LEVEL, UNLESS NOTED IN THE PLAN.
   a. WALL SWITCHES @ 1300mm
   b. ALL CONVENIENCE OUTLETS @ 300 mm
11. ALL ELECTRICAL WORKS SHALL BE DONE UNDER THE DIRECT AND IMMEDIATE SUPERVISION OF A DULY REGISTERED ELECTRICAL ENGINEER.

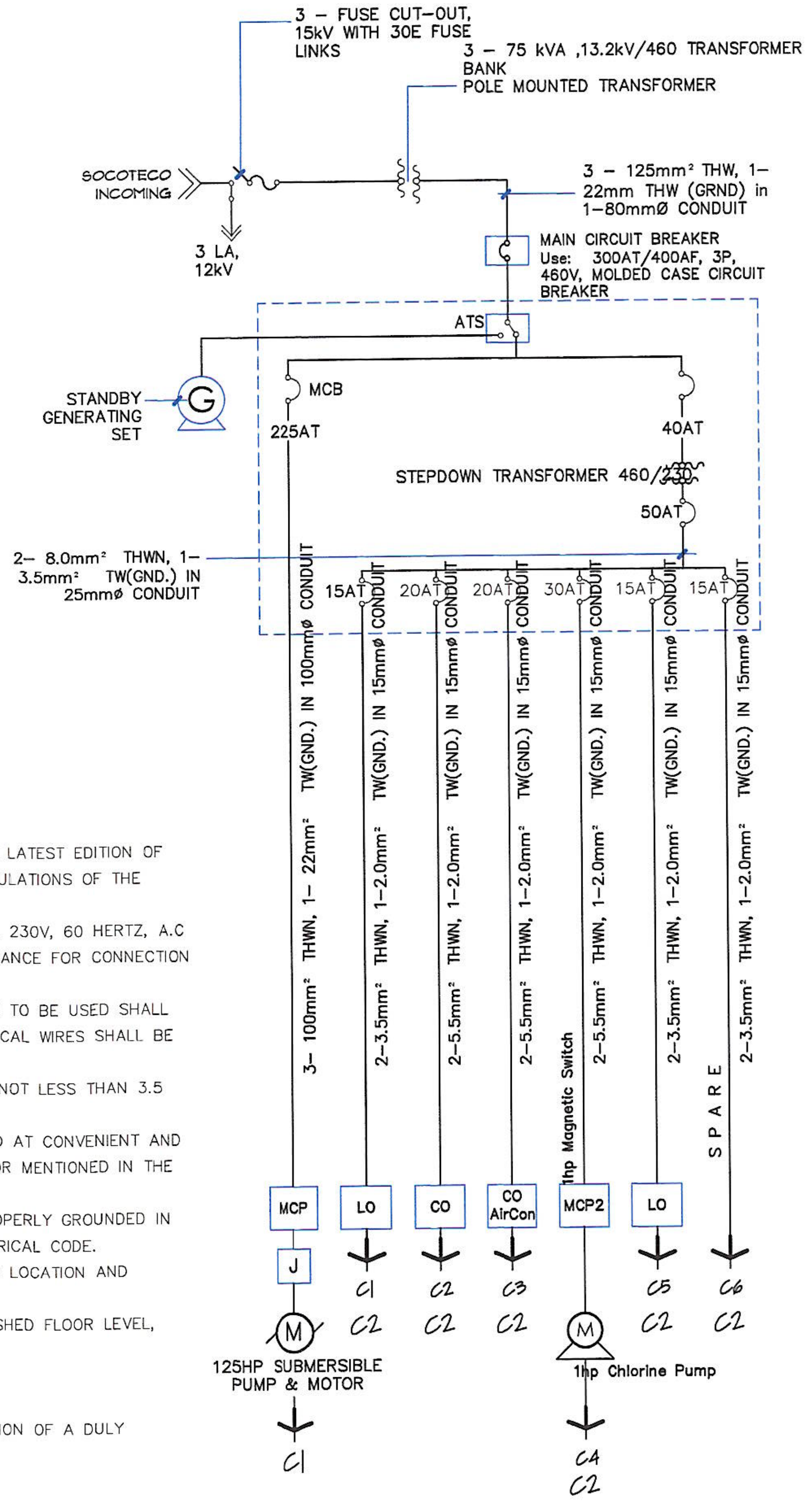

01 E-02 POWER SYSTEM SINGLE LINE DIAGRAM
NOT TO SCALE

GENERAL SANTOS CITY WATER DISTRICT E. FERNANDEZ STREET, BRGY. LAGAO, GEN. SANTOS CITY ENGINEERING & CONSTRUCTION DEPARTMENT PLANNING AND DESIGN DIVISION TEL. NO.: (083) 552 - 3824	PROFESSIONAL ELECTRICAL ENGINEER REG. NO. / TIN. NO. PTR. NO. / DATE :	PROJECT AND LOCATION PROPOSED CONSTRUCTION OF PUMPHOUSE & GENSET SHED LOT 965-G-1, BRGY. MABUHAY, GEN. SANTOS CITY	REVIEWED: ENGR. MARIA CELIA N. DANDAN DEPARTMENT MANAGER, ECD	RECOMMEND APPROVAL: ENGR. ROGELIO A. BESANA, JR. AGM, OTS	APPROVED: FRANCISCO R. ALOLOD, JR., CPA, CESE ACTING GENERAL MANAGER	SHEET CONTENTS AS SHOWN DRAWN BY: / REV. NO. CHECKED BY: / DATE: Apr 2025

SHEET NO. E-02

15 15